Astra Profile500LTIP

IP65 500W Moving Profile, with 6500K LED source, 4° - 50° zoom

USER MANUAL

Rev. 03-Jul-26

English version

Thank you for choosing PROLIGHTS

Please note that every PROLIGHTS product has been designed in Italy to meet quality and performance requirements for professionals and designed and manufactured for the use and application as shown in this document.

Any other use, if not expressly indicated, could compromise the good condition/operation of the product and/or be a source of danger.
This product is meant for professional use. Therefore, commercial use of this equipment is subject to the respectively applicable national accident prevention rules and regulations.

Features, specifications and appearance are subject to change without notice. Music & Lights S.r.l. and all affiliated companies disclaim liability for any injury, damage, direct or indirect loss, consequential or economic loss or any other loss occasioned by the use of, inability to use or reliance on the information contained in this document.

Product user manual can be downloaded from the website www.prolights.it , or can be inquired to the official PROLIGHTS distributors of your territory (***https://www.prolights.it/sales_network.html***).

Scanning the below **QR Code**, you will access the download area of the product page, where you can find a broad set of always updated technical documentation: specifications, user manual, technical drawings, photometrics, personalities, fixture firmware updates.

Visit the download area of the product page

The PROLIGHTS Logo, PROLIGHTS names and all other trademark in this document pertaining to PROLIGHTS services or PROLIGHTS product are trademarks OWNED or licensed by Music & Lights S.r.l., its affiliates, and subsidiaries. PROLIGHTS is a registered trademark by Music & Lights S.r.l. All right reserved. Music & Lights – Via A. Olivetti, snc - 04026 - Minturno (LT) ITALY.

INDEX

SAFETY INFORMATION 02

1 - PACKAGING 05
PACKAGE CONTENT 05
OPTIONAL ACCESSORIES 05

2 - TECHNICAL DRAWING 05

3 - PAN AND TILT LOCK 06

4 - INSTALLATION 07
MOUNTING 07

5 - CONNECTION TO THE MAINS SUPPLY 08

6 - START UP 08
CONNECT AND DISCONNECT POWER FROM THE PRODUCT 08

7 - PRODUCT OVERVIEW 09

8 - DMX CONNECTION 10
CONNECTION OF THE CONTROL SIGNAL: DMX LINE 10
INSTRUCTIONS FOR A RELIABLE DMX CONNECTION 10
CONNECTION DAISY CHAIN 10
CONNECTION OF THE DMX LINE 10
CONSTRUCTION OF THE DMX TERMINATION 11
DMX ADDRESSING 11

9 - CONTROL PANEL 12
DISPLAY AND BUTTONS LAYOUT 12

10 - MENU STRUCTURE 13
DIMMER CURVES 18
DIMMER SPEEDS 19

11 - SHORTCUT 19

12 - RDM FUNCTIONS 20

13 - DMX CHARTS 21
RDM Personality ID List 21
RDM Model ID 21
BLADES BEHAVIOUR 23
FOCUS TRACKING 23

14 - FIXED GOBOS WHEEL 31

15 - ROTATING GOBOS WHEEL 32

16 - COLOR WHEEL 33

17 - ANIMATION WHEEL 34

18 - ERROR MESSAGES 35

19 - PERIODICAL CLEANING 38

20 - GOBOS REPLACEMENT 39

21 - MODULE REMOVAL (ANIMATION, COLOR, GOBOS WHEEL) 40

22 - USB UPDATE MODE 41

23 - MAINTENANCE 42
MAINTENANCE AND CLEANING THE PRODUCT 42
VISUAL CHECK OF PRODUCT HOUSING 42
RESETTING THE MAINTENANCE TIME MESSAGE 43

24 - TEST OF IP65 RATING 44

SAFETY INFORMATION
SAFETY INFORMATION

WARNING!

- • See https://www.prolights.it/product/ASTRAPROF500LTIP#download for installation instructions.
- • Please read carefully the instruction reported in this section before installing, powering, operating or servicing the product and observe the indications also for its future handling.

This unit is not for household and residential use, only professional applications.

Connection to mains supply

- • The Connection to the mains supply must be carried out by a qualified electrical installer.
- • Use only AC supplies 100-240V 50-60 Hz, the fixture must be electrically connected to ground (earth).
- • Select the cable cross section in according with the maximum current draw of the product and the possible number of products connected at the same power line.
- • The AC mains power distribution circuit must be equipped with magnetic+residual current circuit breaker protection.
- • Do not connect it to a dimmer system; doing so may damage the product.
- • The product has XLR sockets for DMX input and output.
- • Connection of the control signal: DMX LINE.
- • Notice: this control circuit is not isolated.
- • Cumulative leakage current of less than 3.5mA on the control circuit.

Protection and Warning against electrical shock

- • Do not remove any cover from the product, always disconnect the product from AC power before servicing.
- • Ensure that the fixture is electrically connected to ground (earth). And use only a source of AC power that complies with local building and electrical codes and has both overload and ground-fault (earth-fault) protection.
- • Before using the fixture, check that all power distribution equipment and cables are in perfect condition and rated for the current requirements of all connected devices.
- • Isolate the fixture from power immediately if the power plug or any seal, cover, cable, or other components are damaged, defective, deformed or showing signs of overheating.
- • Do not reapply power until repairs have been completed.
- • Refer any service operation not described in this manual to PROLIGHTS Service team or an authorized PROLIGHTS service center.

Installation

- • Make sure that all visible parts of the product are in good visible condition before its use or installation.
- • Make sure the point of anchorage is stable before positioning the projector.
- • When suspending the fixture above ground level, secure it against failure of primary attachments by attaching a safety cable that is approved as a safety attachment for the weight of the fixture to the attachment point on the main frame of the product. In case the safety cable, enter in action, it needs to be replaced with a new one.
- • Install the product only in well ventilated places.
- • For non temporary installations, ensure that the fixture is securely fastened to a load-bearing surface with suitable corrosionresistant hardware.
- • For a temporary installation with clamps, ensure that the quarter-turn fastener and/or screws are turned fully, and secured with a suitable safety cable.

Minimum distance of illuminated objects

- • The projector needs to be positioned so that the objects hit by the beam of light are at least 2.4 m (7.87 ft) from the lens of the projector.

Max operating ambient temperature (Ta)

- • Do not operate the fixture if the ambient temperature (Ta) exceeds 45 °C (113 °F).

Minimum operating ambient temperature (Ta)

- • Do not operate the fixture if the ambient temperature (Ta) is below -20 °C (-4 °F).

Protection from burns and fire

- • The exterior of the fixture becomes hot during use. Avoid contact by persons and materials.
- • Ensure that there is free and unobstructed airflow around the fixture.
- • Keep flammable materials well away from the fixture
- • Do not expose the front glass to sunlight or any other strong light source from any angle. Lenses can focus the sun's rays inside the fixture, creating a potential fire hazard.
- • Do not attempt to bypass thermostatic switches or fuses.

- **Permanent Outdoor use**
- • This product is rated with an IP (Ingress protection) for permanent outdoor use when used and serviced according to the instruction contained in this document.
- • Never use the fixture in places subject to vibrations or bumps.
- • Make certain that no inflammable liquids, water or metal objects enter the fixture.
- • Excessive dust, smoke fluid, and particle build up degrades performance, causes overheating and will damage the fixture.
- • Damages caused by inadequate cleaning or maintenance are not covered by the product warranty.

Temperature of the external surface

- • The surface of the fixture can reach up to 66.5 °C (151.7 °F) during operation. Avoid contact with people and materials.

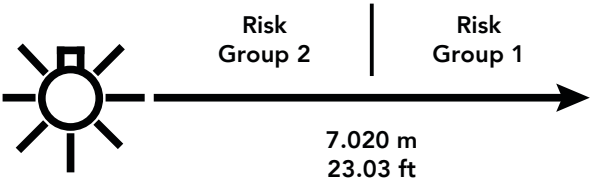

Disposal

- This product is supplied in compliance with European Directive 2012/19/EU – Waste Electrical and Electronic Equipment (WEEE). To preserve the environment please dispose/ recycle this product at the end of its life according to the local regulation.

The products to which this manual refers comply with:

- 2014/35/EU - Safety of electrical equipment supplied at low voltage (LVD).
- 2014/30/EU - Electromagnetic Compatibility (EMC).
- 2011/65/EU - Restriction of the use of certain hazardous substances (RoHS).

FCC Compliance:

- This device complies with Part 15 of the FCC Rules. Operation is subject to the following two conditions:

1. This device may not cause harmful interference, and
2. This device must accept any interference received, including interference that may cause undesired operation.

Other approvals

- The product meets the safety requirements of the certification procedures of the market in which it is placed and sold.

1 - PACKAGING

PACKAGE CONTENT

- 1x ASTRAPROF500LTIP.
- 1 x 1,5 meters 3G2,5mmq power cable (BARE END - SEETRONIC POWERCON TRUE1 IP65 power connector)
- 2x OSIPPLUS, Quick-lock omega bracket.
- 1x Antenna.
- User Manual.

OPTIONAL ACCESSORIES

Check the updated accessories list, description and informations of the product at the following link:
https://www.prolights.it/product/ASTRAPROF500LTIP#accessories

2 - TECHNICAL DRAWING

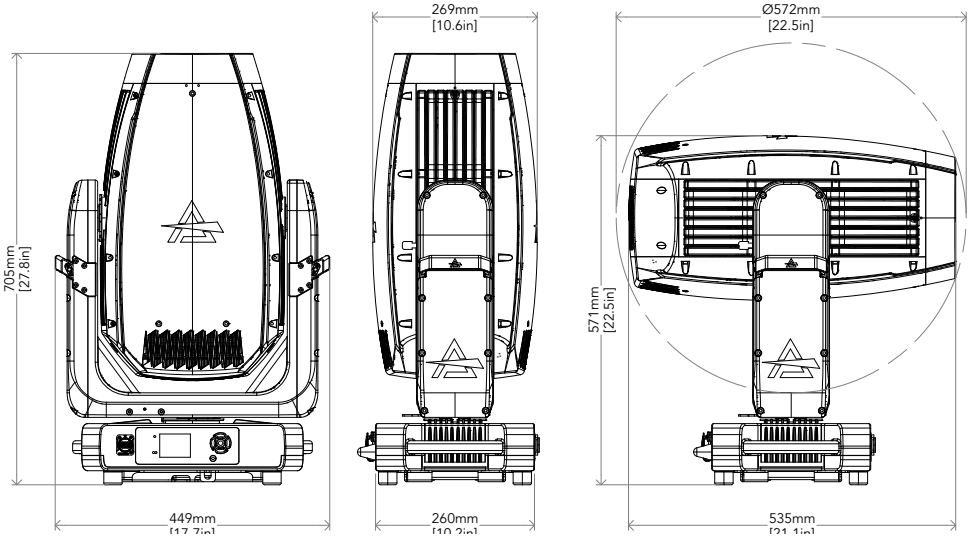

Weight: 34,0 kg - 74,96 lbs

Fig. 01

3 - PAN AND TILT LOCK

PAN Mechanism lock and release

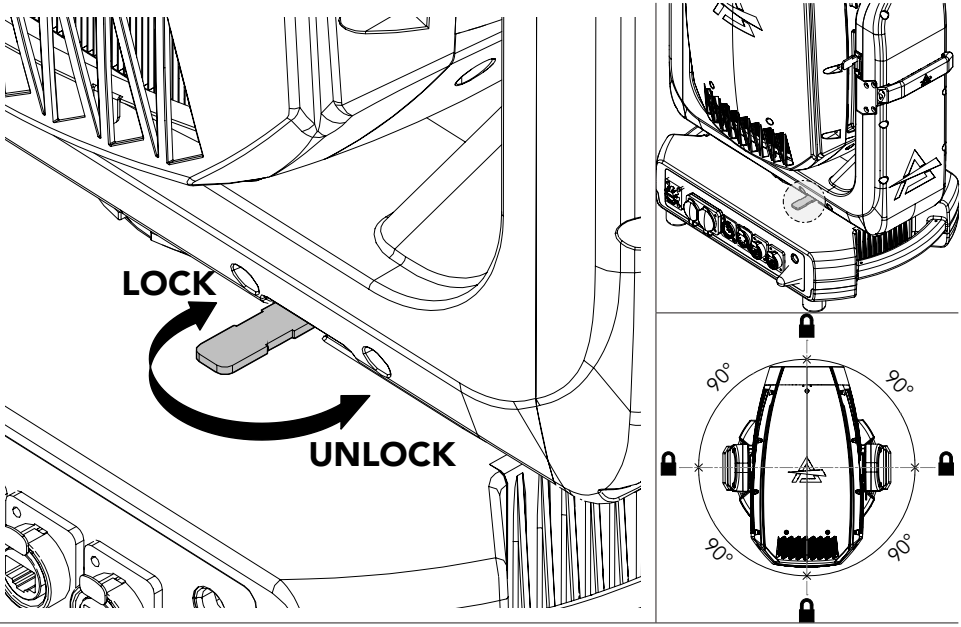

TILT Mechanism lock and release

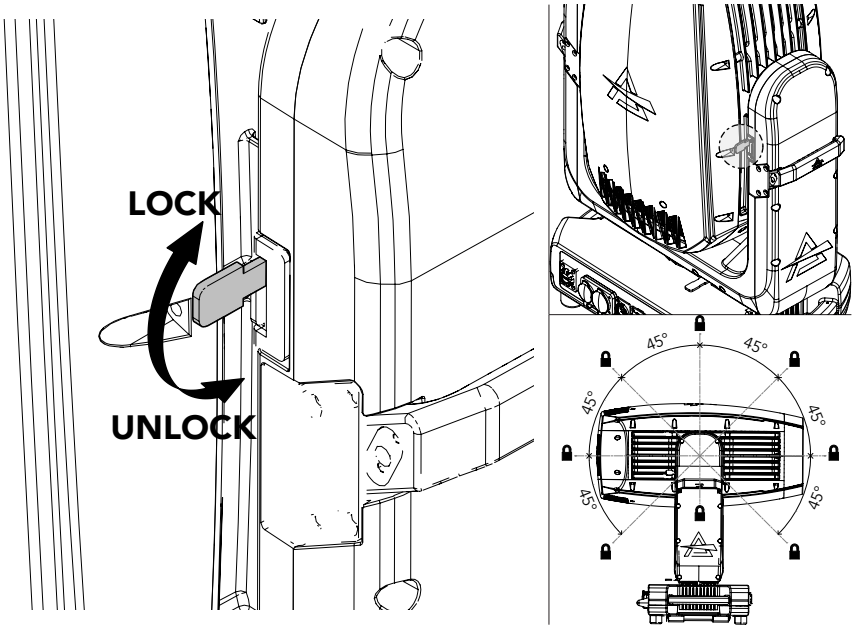

Fig. 02

4 - INSTALLATION

MOUNTING

Check that the supporting structure can safely bear the weight of all installed fixtures, clamps, cables, auxiliary equipment, etc. and complies with locally applicable regulations.

When suspending the fixture above ground level, secure it against failure of primary attachments by attaching a safety wire that is approved as a safety attachment for the weight of the fixture to an anchor point on the product main frame.

Do not use removable parts or weak anchors for secondary attachment.

Warning! When clamping the fixture to a truss or other structure at any angle, use clamps of half-coupler type. Do not use any type of clamp that does not completely encircle the structure when fastened.

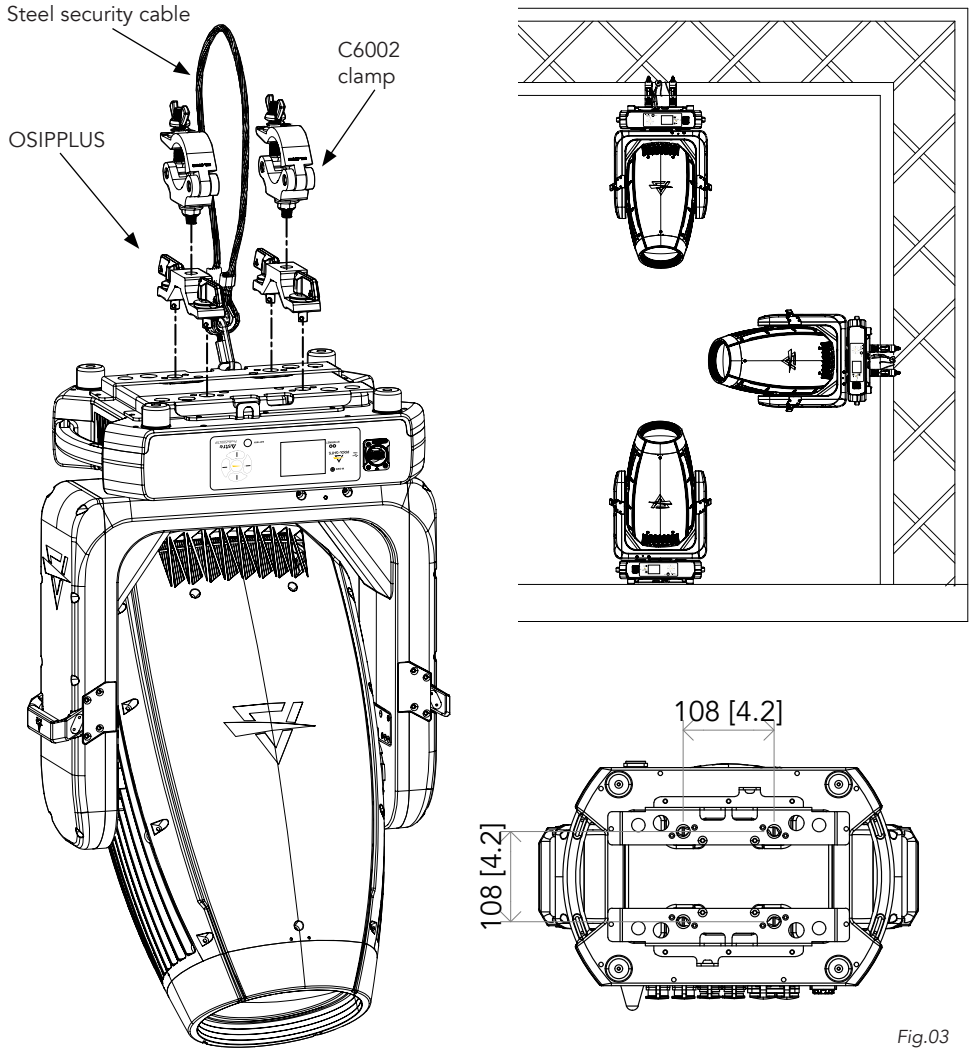

Fig.03

5 - CONNECTION TO THE MAINS SUPPLY

WARNING: For protection from electric shock, the fixture must be earthed!
The product is equipped with auto-switching power supply that automatically adjusts to any 50-60Hz AC power source from 100-240 Volts (max absolutes range : 90- 264V).
If you need to install a power plug on the power cable to allow connection to power outlets, install a grounding-type (earthed) plug, following the plug manufacturer's instructions. If you have any doubts about proper installation, consult a qualified electrician.
The max power consumption is 788W.

Core (EU)	Core (US)	Connection	Plug terminal marking
Brown	Black	Live	L
Blue	White	Neutral	N
Yellow+green	Green	Earth	⏚

6 - START UP

CONNECT AND DISCONNECT POWER FROM THE PRODUCT
To apply and disconnect power to the product:

- Check that the product is installed and secured as indicated in the Safety Informations, and that personal safety will not be put at risk when the fixture lights up;
- Connect the power connector into the Mains input socket (100-240 VAC-50/60 Hz);
- The product is then ready for its operations and can be controlled through the available input signals on board;
- To disconnect power from the product, disconnect the Mains from the socket.

7 - PRODUCT OVERVIEW

1. USB PORT for quick firmware upgrade;
2. USER INTERFACE with display and buttons for access to the control panel functions;
3. SAFETY EYES: to attach safety cable;
4. BATTERY HOLDER;
5. POWER IN/OUT: for connection to the Mains 100-240V~/50-60Hz;
6. DMX IN/OUT (5-p XLR): 1 = GND, 2 = sign-, 3 = sign+, 4 N/C, 5 N/C;
7. ETHERCON CONNECTORS IN / OUT signal.
8. ANTENNA: for wireless operations;
9. GORE VALVE;
10. RETRACTABLE HANDLES to move and install the fixture.

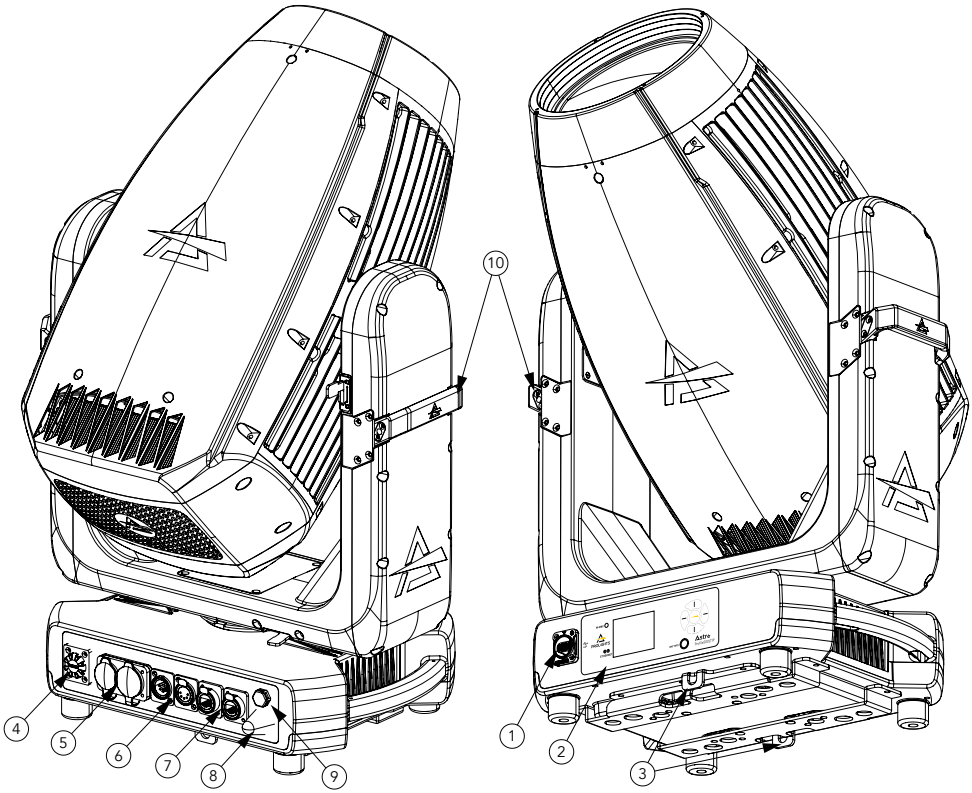

Fig 04

8 - DMX CONNECTION

CONNECTION OF THE CONTROL SIGNAL: DMX LINE
The product has XLR sockets for DMX input and output.
The default pin-out on both socket is as the following diagram:

DMX - INPUT
XLR plug

Pin1 : GND - Shield
Pin2 : - Signal
Pin3 : + Signal
Pin4 : N/C
Pin5 : N/C

DMX - OUTPUT
XLR socket

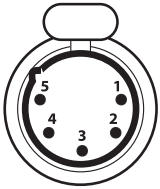

Fig. 05

INSTRUCTIONS FOR A RELIABLE DMX CONNECTION
Use shielded twisted-pair cable designed for RS-485 devices: standard microphone cable cannot transmit control data reliably over long runs. 24 AWG cable is suitable for runs up to 300 meters (1000 ft).
Heavier gauge cable and/or an amplifier is recommended for longer runs.
To split the data link into branches, use splitter-amplifiers in the connection line.
Do not overload the link. Up to 32 devices may be connected on a serial link.

CONNECTION DAISY CHAIN
Connect the DMX data output from the DMX source to the product DMX input (male connector XLR) socket.
Run the data link from the product XLR output (female connector XLR) socket to the DMX input of the next fixture.
Terminate the data link by connecting a 120 Ohm signal termination. If a splitter is used, terminate each branch of the link.
Install a DMX termination plug on the last fixture on the link.

CONNECTION OF THE DMX LINE
DMX connection employs standard XLR connectors. Use shielded pair-twisted cables with 120Ω impedance and low capacity.
The following diagram shows the connection mode:

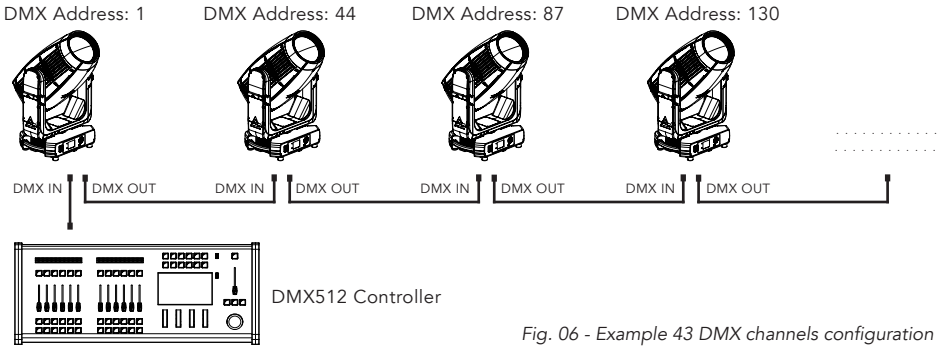

Fig. 06 - Example 43 DMX channels configuration

CONSTRUCTION OF THE DMX TERMINATION

The termination is prepared by soldering a 120Ω 1/4 W resistor between pins 2 and 3 of the male XLR connector, as shown in figure.

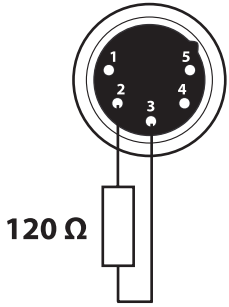

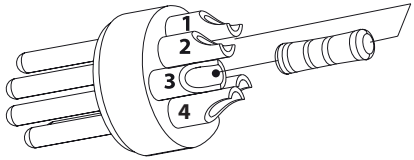

Example:
5 pin XLR connector

Fig. 07

DMX ADDRESSING

In order to start controlling the product via DMX, the first step is to select a DMX address, also known as the start channel, this is the first channel used to receive instructions from a DMX controller. If you wish to control the product individually, it is necessary to assign a different starting address channel to each fixture.

The number of channels occupied from the product depends on the DMX mode selected, so always verify the DMX Mode in the MENU before start addressing.

If you assign two fixtures the same address, they will be executing the same behaviour. Selecting the same address to multiple fixtures can be useful for diagnostic purposes and symmetrical control.

DMX addressing is limited to make it impossible to set the DMX address so high that you are left without enough control channels for the product.

To set the fixture's DMX address:

1. Press ENTER to open the main menu;
2. Reach the addressing menu, then select the DMX ADDRESS settings;
3. Select the address from 1 to 512 using the navigation arrows/buttons and confirm by pressing ENTER;
4. Press Menu to exit and return to the Home screen.

9 - CONTROL PANEL

The product has a display and buttons for access to the control panel functions.

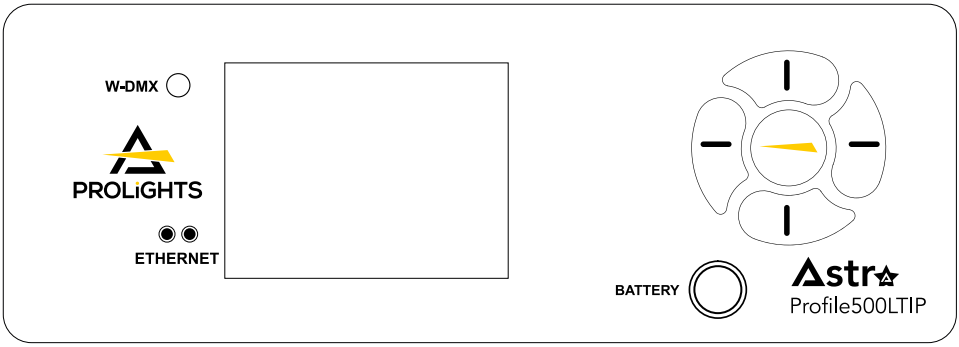

Fig. 08

DISPLAY AND BUTTONS LAYOUT

The product has a display and buttons for access to the control panel functions:

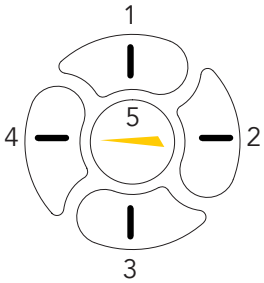	1		• Browse upwards through the menu list and increases the numeric value displayed.
	2		• Scroll from left to right when entering numerical values, switching between hundreds, tens and units
	3		• Browse downwards through the menu list and decreases the numeric value displayed.
	4		• Return to the top level, or scroll from right to left when entering numerical values, switching between units, tens and hundreds
	5		• Used to confirm the displayed value, or activate the displayed function or to access the menu tree or to return a previous menu window.
BATTERY	• Switch on the display using backup battery. Hold for 5s. • Switch off display by pressing button 4 for 5s while on being on Home screen.		

10 - MENU STRUCTURE

The following chart describes the MENU tree of the product, the terms shown in **BOLD** indicates the default settings.

MENU: CONNECT

LEVEL 1	LEVEL 2	LEVEL 3	LEVEL 4	LEVEL 5	DESCRIPTION
DMX ADDRESS	**DMX /** CRMX	**1**-512			Set DMX Address for Main fixture
	SACN				
	ARTNET				
DMX MODE	**STANDARD**				
WIRELESS	CRMX ON/OFF	ON			Enable the wireless card.
		OFF			
	CRMX MODE	TX CRMX			Allows configuration of the wireless card as either a Transmitter or Receiver. G4s and G3 are supported protocols for connection with Wireless Solution products.
		TX G4S			
		TX G3			
		RX			
	TX LINK	ON			Enables the transmission link when the unit is set as a Transmitter.
		OFF			
	TX UNLINK	ON			Disconnects the transmitter from all connected receivers. TX Unlink can only be used when the unit is in Transmitter mode in CRMX settings.
		OFF			
	RX RESET	ON			Disconnects the CRMX card, set as a Receiver, from any connected transmitters.
		OFF			
	IN TO CRMX (TX)	**ON**			Enable/Disable the transmission of the DMX from the transmitter to the receiver via CRMX
		OFF			
	CRMX TO DMX (RX)	**ON**			Enable/Disable the retransmission of the DMX from the receiver to the other units connected by cable to the receiver itself
		OFF			
	LINKING KEY	ON	SET LINKING KEY		Insert 8 digit code RX Mode: Possible to choose mode and universe
			LINKING MODE	**CRMX**	
				CRMX2	
			LINKING UNIVERSE	**A**	
				B (Only in CRMX2)	
				C	
				D (Only in CRMX2)	
				E	
				F (Only in CRMX2)	
				G	
				H (Only in CRMX2)	
		OFF			

MENU: CONNECT

LEVEL 1	LEVEL 2	LEVEL 3	LEVEL 4	LEVEL 5	DESCRIPTION
WIRELESS	LINK STRENGTH	** %			Show Wireless quality by percentage
	CRMX SOFTWARE VERSION	TimoFX: Vx.x.xx			Show firmware version of TimoFX module
ETHERNET SETTINGS	IP ADDRESS	xxx.xxx.xxx.x			Set IP Address for ArtNet usage.
	SUBNET MASK	255.xxx.xxx.x			Set SubNet Mask for ArtNet usage.
	ARTNET SETTINGS	ABSOLUTE UNIVERSE	XXXXX		One of the 32,768 possible addresses to which a DMX frame can be directed. The Port-Address is a 15 bit number composed of Net+Sub-Net+Universe.
		NET	**0**-127		A group of 16 consecutive Sub-Nets or 256 consecutive Universes is referred to as a net. There are 128 Nets in total.
		SUBNET	**0**-15		A group of 16 consecutive universes is referred to as a sub-net. (Not to be confused with the subnet mask).
		UNIVERSE	**0**-15		A single DMX512 frame of 512 channels is referred to as a Universe.
	sACN SETTINGS	UNIVERSE	**1**-63999		6.2.7 E1.31 Data Packet: Universe The Universe is a 16-bit field that defines the universe number of the data carried in the packet. Universe values shall be limited to the range 1 to 63999. Universe value 0 and those between 64000 and 65535 are reserved for future use. E131_ DISCOVERY_UNIVERSE is the Universe Discovery universe. See Section 9 for more information.
		MERGE MODE	**OFF**		Toggle and Set Merge mode for sACN.
			HTP		
			LTP		
	ETHERNET TO CRMX	**ON**			
		OFF			
	ETHERNET TO DMX	**ON**			Enables retransmission of the Ethernet signal over a standard DMX cable. A slight time delay may occur on the DMX line.
		OFF			

MENU: SETUP

LEVEL 1	LEVEL 2	LEVEL 3	LEVEL 4	LEVEL 5	DESCRIPTION
SCREEN	BACKLIGHT	ALWAYS ON			Sets the time after which the display will automatically turn off when inactive.
		15s			
	FLIP DISPLAY	**AUTO**			Enables the display to be rotated by 180°.
		ON			
		OFF			
	KEY LOCK	ON			Lock the buttons on the control panel with a password. To access the user menu, enter the following button sequence (password): UP, DOWN, UP, DOWN, ENTER.
		OFF			
MOVEMENT	PAN REVERSE	YES			*Allows you to reverse Pan movement.*
		NO			
	TILT REVERSE	YES			*Allows you to reverse Tilt movement.*
		NO			
	PAN/TILT MODE	**FAST**			*To choose the horizontal/ vertical movement speed. SYNC mode will sync movement speed with the whole ASTRAWASH f miliy fixtures.*
		MEDIUM			
		SLOW			
DIMMER	DIMMER CURVE	LINEAR			Check pag.18 for further details
		S-CURVE			
		SQUARE LAW			
		INVERSE SQUARE LAW			
	DIMMER SPEED	**AUTO**			Check pag.19 for further details
		FAST			
		MEDIUM			
		SLOW			
FIXTURE	FAN MODE	**AUTO**			*Select Fan behaviour.*
		SILENT			
		HIGH			
	DMX FAULT	**HOLD**			Defines fixture behavior on DMX signal loss: HOLD (keep last state), BLACKOUT (turn off), STAND ALONE (run internal program), or EMERGENCY (activate emergency mode with white output).
		BLACKOUT			
	STATUS LED	**ON**			
		OFF			
	INVERT ZOOM	ON			
		OFF			
	INVERT BLADES	ON			
		OFF			
TRANSFER SETTINGS	WITHOUT DMX ADDRESS				Transfer settings from the current fixture to another fixture of the same model using the DMX protocol. If a signal from another source is present, the Transfer Configuration function will not be available.
	WITH DMX ADDRESS				

MENU: ADVANCED

LEVEL 1	LEVEL 2	LEVEL 3	LEVEL 4	LEVEL 5	DESCRIPTION
LED FREQUENCY	**1000Hz**				Select PWM frequency. NOTE: Using higher LED Frequency color accuracy may be slightly compromised at low level of dimmer.
	2000 Hz				
	4000 Hz				
	6000 Hz				
	25 kHz				
	50 kHz				
RESET	ALL				*To reset these functions.*
	PAN & TILT				
	ZOOM/FOCUS				
	COLORS				
	GOBOS / ANIMATION				
	EFFECTS				
	ALL BLADES				
MANUAL CONTROL	PAN				*Manual Control of each functionality via display. If this function is accessed with a valid DMX signal present, values are taken from last DMX frame received. Signal is ignored while fixture stays in this menu. Timeout for screen is inhibited. No Auto-leave function.*
	PAN FINE				
	TILT				
	TILT FINE				
	DIMMER				
	DIMMER FINE				
	SHUTTER				
	CYAN				
	MAGENTA				
	YELLOW				
	CTO				
	COLOR WHEEL				
	GOBO WHEEL 1				
	GOBO ROTATION 1				
	GOBO ROT FINE 1				
	GOBO WHEEL 2				
	GOBO ROTATION 2				
	GOBO ROT FINE 2				
	PRISM 1				
	PRISM 1 ROTATION				
	PRISM 2				
	PRISM 2 ROTATION				
	FROST 1				
	FROST 2				
	IRIS				
	ZOOM				
	ZOOM FINE				

MENU: ADVANCED

LEVEL 1	LEVEL 2	LEVEL 3	LEVEL 4	LEVEL 5	DESCRIPTION
MANUAL CONTROL	FOCUS				*Manual Control of each functionality via display. If this function is accessed with a valid DMX signal present, values are taken from last DMX frame received. Signal is ignored while fixture stays in this menu. Timeout for screen is inhibited. No Auto-leave function.*
	FOCUS FINE				
	ANIMATION				
	ANIMATION ROTATION				
	BLADE 1 POSITON				
	BLADE 1 ROT				
	…				
	BLADE 4 POSITON				
	BLADE 4 ROT				
	FRAME ROT				
	CONTROL				
RELOAD DEFAULT	BASIC RELOAD	YES			Default of all parameters excepted Calibration
		NO			
	FACTORY RELOAD	YES			Delete all USER PRESETS stored
		NO			

MENU: INFORMATIONS

LEVEL 1	LEVEL 2	LEVEL 3	LEVEL 4	LEVEL 5	DESCRIPTION
FIXTURE TIME	FIXTURE HOURS	TOTAL	<65535H>		View informations about product operating lifetime. Fixture Hours is countered based on general operation time. Hours are countered since Power is plugged in. Source Hours is countered based on LED Activity time
		PARTIAL	<65535H>		
	CURRENT HOURS	TOTAL	<65535H>		
		PARTIAL	<65535H>		
	SOURCE HOURS	TOTAL	<65535H>		
		PARTIAL	<65535H>		
	POWER ON CYCLE	TOTAL	<65535H>		
		PARTIAL	<65535H>		
	MAINTENANCE TIME	ELAPSED TIME			
		ALERT PERIOD	10 - 750		
POWER LED	** W				Show estimated power consumption
TEMP.	NEAR SOURCE TEMP, DRIVER PCB TEMP, LED PCB TEMP,…				
FAN SPEED	NEAR SOURCE FAN, BASE FAN,…				Show all FAN speeds.
CHANNEL VALUE					Show all Channel values as a list, value shown depends on DMX Mode
ERROR MESSAGE					Show error message
DEVICE LABEL	ASTRAPROF500LTIP				Show RDM Label.
DEVICE MODEL	ASTRAPROF500LTIP				Show RDM fixture model
RDM UID					Show RDM UID of the fixture.
SOFTWARE VERSION	1U01 V1.0.00...				Show firmware version of the fixture

DIMMER CURVES

Five dimming modes are available:

1. **LINEAR** - Light intensity increases proportionally to the DMX value, creating a linear perception;
2. **S-CURVE** - Light intensity is finer at low and high levels, with coarser control at mid-levels;
3. **SQUARE LAW** - Light intensity is finer at low levels and becomes coarser at higher levels;
4. **INVERSE SQUARE LAW** - Light intensity is coarser at low levels and finer at higher levels.

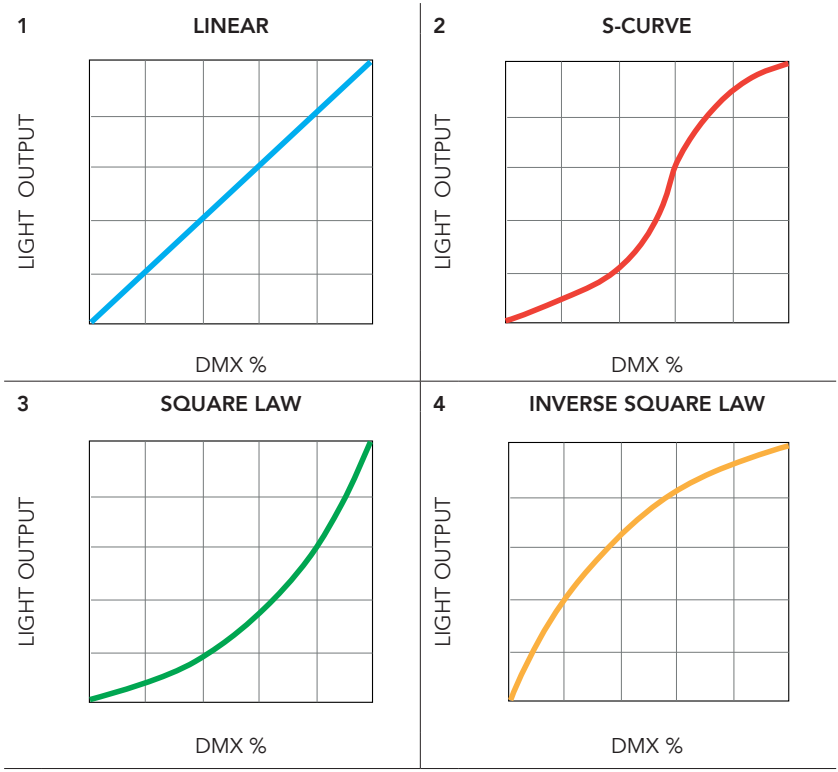

Fig. 09

DIMMER SPEEDS

Five dimming speeds are available:

1. **AUTO** - When the DMX value changes by more than 50 DMX values, the intensity will instantly adjust to the new value. For changes less than 50 DMX values, the fast dimming curve will be applied;
2. **FAST** - Indicates the fast speed dimming curve. Refer to the diagram for reference;
3. **MEDIUM** - Indicates the medium speed dimming curve. Refer to the diagram for reference;
4. **SLOW** - Indicates the slow dimming curve. Refer to the diagram for reference.

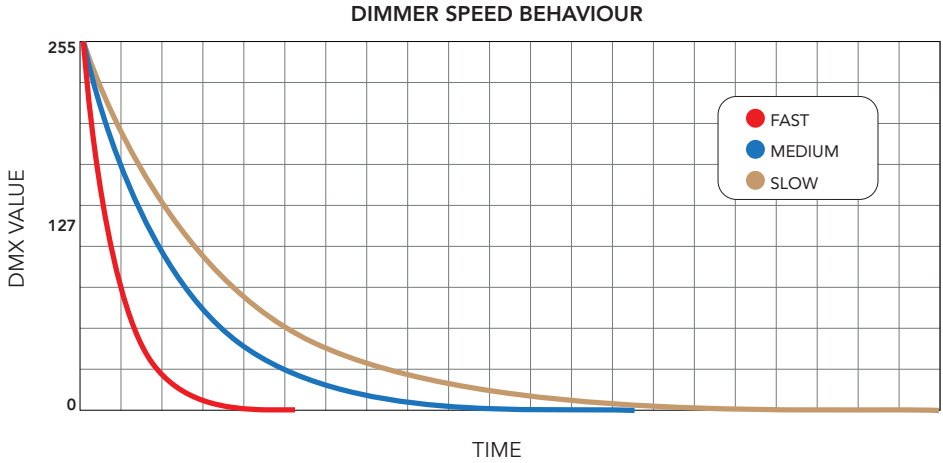

Fig. 10

11 - SHORTCUT

Keys	Mode	Description
UP + DOWN after power on	Flip Display	Directly flip display without enter inside menu
DOWN then power on	Reset without pan/tilt movements	Fixture will be powered on without reset on pan/tilt movements
ENTER + UP then power on	Bootloader	Force firmware upgrade
CONTROL CHANNEL set to 220 + PAN FINE CHANNEL SET TO 255, within 3s PAN FINE need to be set to 0	Basic Reload	This Reload also reset DMX address and mode. This combination need to be performed while fixture is resetting

12 - RDM FUNCTIONS

The product can communicate using RDM (Remote Device Management) protocol over a DMX512 Networks.
RDM is a bi-directional communications protocol for use in DMX512 control systems, it is the open standard for DMX512 device configuration and status monitoring.
The RDM protocol allows data packets to be inserted into a DMX512 data stream without affecting existing non-RDM equipment. It allows a console or dedicated RDM controller to send commands to and receive messages from specific fixtures.
The PIDs in the following tables are supported in the product.

Category	Parameter	Value	GET	SET
Product Information	SUPPORTED PARAMETERS	0x0050	x	
	DEVICE_MODEL_DESCRIPTION	0x0080	x	
	MANUFACTURER_LABEL	0x0081	x	
	DEVICE_LABEL	0x0082	x	x
DMX512 Setup	DMX_PERSONALITY	0x00E0	x	x
	DMX_PERSONALITY_DESCRIPTION	0x00E1	x	
	DMX_START_ADDRESS	0x00F0	x	x
Sensors	SENSOR_DEFINITION	0x0200	x	
	SENSOR_VALUE	0x0201	x	x
Dimmer Settings	CURVE	0x0343	x	x
	CURVE_DESCRIPTION	0x0344	x	x
	OUTPUT_RESPONSE_TIME	0x0345	x	x
	OUTPUT_RESPONSE_TIME_ DESCRIPTION	0x0346	x	
	MODULATION_FREQUENCY	0x0347	x	x
	MODULATION_FREQUENCY_ DESCRIPTION	0x0348	x	
Power/Lamp Settings	DEVICE_HOURS	0x0400	x	x
	LAMP_HOURS	0x0401	x	x
Configuration	PAN_INVERT	0x0600	x	x
	TILT_INVERT	0x0601	x	x

13 - DMX CHARTS

RDM Personality ID List

ID	DMX Mode	Footprint
1	STANDARD	43

RDM Model ID

0xA041

DMX Chart Summary

Channel	STANDARD
1	Pan
2	Pan fine
3	Tilt
4	Tilt fine
5	Dimmer
6	Dimmer Fine
7	Shutter
8	Cyan
9	Magenta
10	Yellow
11	CTO Wheel
12	Color Wheel
13	Rot Gobo Wheel
14	Gobo Rot
15	Gobo Rot Fine
16	Fix Gobo Wheel 1
17	Prism 1 Circular
18	Prism 1 Index/Rotation
19	Prism 2 Linear
20	Prism 2 Index/Rotation
21	Light Frost
22	Heavy Frost

Channel	STANDARD
23	Iris
24	Iris Fine
25	Zoom
26	Zoom Fine
37	Focus
28	Focus Fine
29	Animation Insertion
30	Animation Rotation
31	Blade 1 position
32	Blade 1 swivelling
33	Blade 2 position
34	Blade 2 swivelling
35	Blade 3 position
36	Blade 3 swivelling
37	Blade 4 position
38	Blade 4 swivelling
39	Frame rotation
40	Frame macros
41	Frame macros speed
42	Focus Tracking
43	Control

PAN/TILT POSITION RELATED TO DMX VALUES

Pan = 0
Tilt = 0

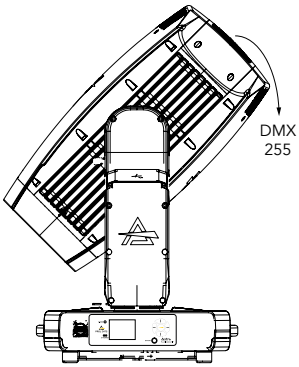

Pan = 0
Tilt = 128

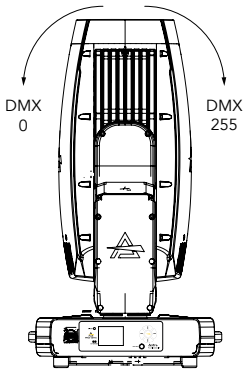

Pan = 0
Tilt = 255

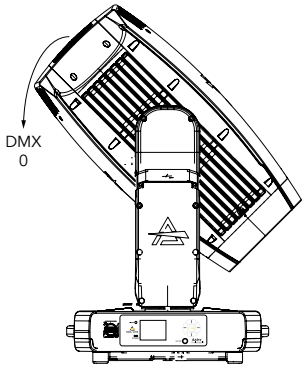

Tilt movement range: 260°
Pan movement range: 540°

Pan = 0
Tilt = 42

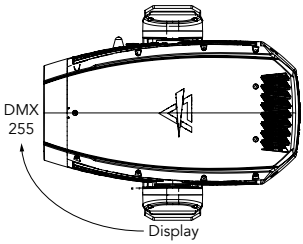

Pan = 128
Tilt = 42

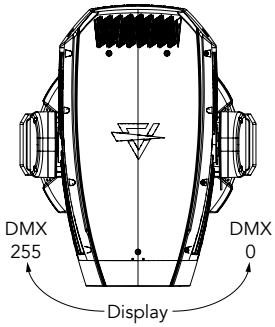

Pan = 255
Tilt = 42

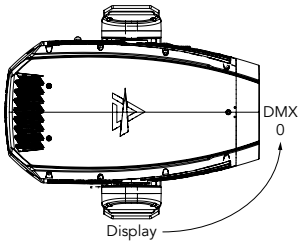

Fig.11

BLADES BEHAVIOUR

Check Below image for all the informations about the profile module

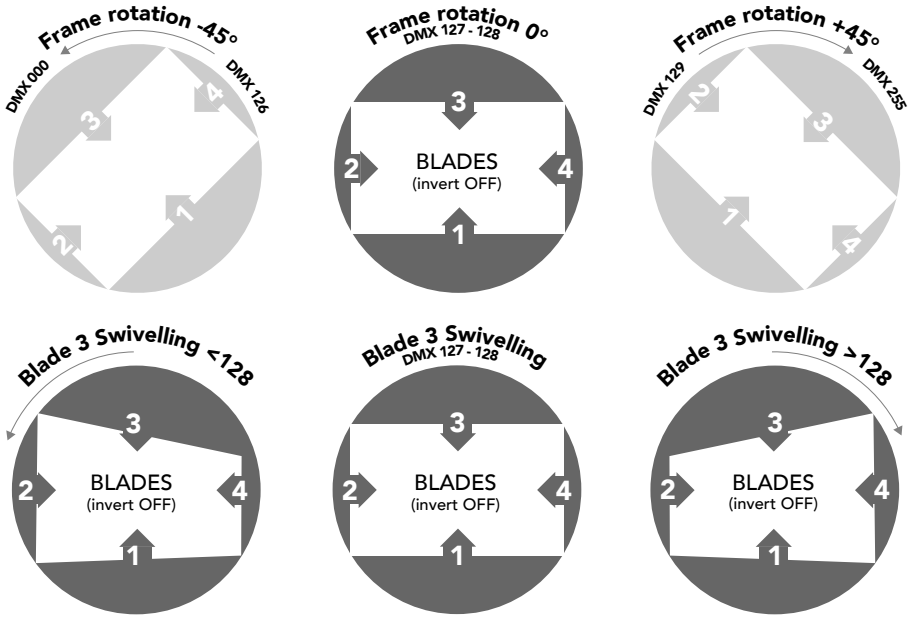

PROJECTION ON THE WALL

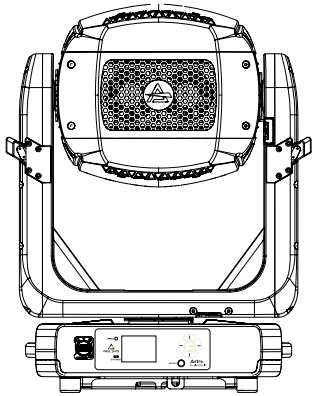

Fixture with
PAN/TILT channels @
PAN @50% - DMX128
TILT @ 84% - DMX 214

Fig.12

FOCUS TRACKING

This function provides auto-adjustment of the focus during the zoom movement:

1. Select the function to be tracked via channel 42 ("Focus Tracking");
2. Focus the selected function at a narrow zoom (***NOTE**: the zoom value must be less than 135*);
3. As you adjust the zoom, the focus will automatically follow, keeping the projection focused;
4. If you select a different function via channel 42 ("Focus Tracking"), the focus will automatically adjust to track the new selection.

Channel STANDARD	Name	Function	DMX		Default
			From	To	
1	Pan	Pan movement	0	255	128
2	Pan fine	Fine pan movement	0	255	0
3	Tilt	Tilt movement	0	255	128
4	Tilt fine	Fine tilt movement	0	255	0
5	Dimmer	Dimmer intensity 0 – 100%	0	255	0
6	Dimmer Fine	Fine dimming	0	255	0
7	Shutter	Open	0	1	0
		Strobe from slow to fast	2	62	
		Open	63	64	
		Pulse in from slow to fast	65	125	
		Close	126	127	
		Pulse out from slow to fast	128	188	
		Open	189	190	
		Randon from slow to fast	191	251	
		Open	252	255	
8	Cyan Wheel	Open	0	0	0
		Linear saturation 0 – 100%	1	255	
9	Magenta Wheel	Open	0	0	0
		Linear saturation 0 – 100%	1	255	
10	Yellow Wheel	Open	0	0	0
		Linear saturation 0 – 100%	1	255	
11	CTO Wheel	Open	0	0	0
		Linear saturation 0 – 100%	1	255	
12	Color Wheel	Color Linear Movement			0
		Open	0	1	
		Open + Deep Red	2	22	
		Deep Red	23	23	
		Deep Red + Deep Yellow	24	44	
		Deep Yellow	45	45	
		Deep Yellow + High CRI	46	66	
		High CRI	67	67	
		High CRI + Full CTB	68	88	
		Full CTB	89	89	
		Full CTB + Forest Green	90	110	
		Forest Green	111	111	
		Forest Green + Dark Blue	112	132	
		Dark Blue	133	133	
		Dark Blue + Open	134	154	
		Open	155	159	

Channel STANDARD	Name	Function	DMX From	DMX To	Default
12		Color Slot			0
		Open	160	164	
		Deep Red	165	169	
		Deep Yellow	170	174	
		High CRI	175	179	
		Full CTB	180	184	
		Forest Green	185	189	
		Dark Blue	190	199	
		Color Wheel Rotation			
		Forward rainbow - Fast to slow	200	224	
		No rotation	225	230	
		Backwards rainbow - Slow to fast	231	255	
13	Rot Gobo Wheel	Open	0	11	0
		Gobo Indexing (set next ch)			
		GOBO 1	12	19	
		GOBO 2	20	27	
		GOBO 3	28	35	
		GOBO 4	36	43	
		GOBO 5	44	51	
		GOBO 6	52	59	
		GOBO 7	60	67	
		Gobo Rotation (set next ch)			
		GOBO 1	68	75	
		GOBO 2	76	83	
		GOBO 3	84	91	
		GOBO 4	92	99	
		GOBO 5	100	107	
		GOBO 6	108	115	
		GOBO 7	116	123	
		Gobo shaking - Slow to fast (Index on next channel)			
		GOBO 1	124	133	
		GOBO 2	134	143	
		GOBO 3	144	153	
		GOBO 4	154	163	
		GOBO 5	164	173	
		GOBO 6	174	183	
		GOBO 7	184	193	

Channel STANDARD	Name	Function	DMX From	DMX To	Default
13		Gobo Wheel Rotation			
		Forward rotation - Fast to slow	194	223	
		No rotation	224	225	
		Backwards rotation - Slow to fast	226	255	
14	Gobo Rot	Gobo Indexing			0
		Gobo index 0° - 360°	0	255	
		Gobo Rotation			
		No rotation	0	0	
		Forward gobo rotation - Fast to slow	1	127	
		No rotation	128	128	
		Backwards gobo rotation - Slow to fast	129	255	
15	Gobo Rot Fine	Fine indexing/rotation	0	255	0
16	Fix Gobo Wheel 1	Open	0	9	0
		Gobo selection			
		GOBO 1	10	16	
		GOBO 2	17	23	
		GOBO 3	24	30	
		GOBO 4	31	37	
		GOBO 5	38	44	
		GOBO 6	45	51	
		GOBO 7	52	58	
		GOBO 8	59	65	
		Gobo shaking - Slow to fast			
		GOBO 1 shake	66	81	
		GOBO 2 shake	82	97	
		GOBO 3 shake	98	113	
		GOBO 4 shake	114	129	
		GOBO 5 shake	130	145	
		GOBO 6 shake	146	161	
		GOBO 7 shake	162	177	
		GOBO 8 shake	178	193	
		Gobo Wheel Rotation			
		Forward rotation - Fast to slow	194	223	
		No rotation	224	225	
		Backwards rotation - Slow to fast	226	255	
17	Prism 1 Circular	Open	0	29	0
		Prism Indexing (set next ch)	30	59	
		Prism Rotation (set next ch)	60	89	
		Reserved	90	255	

Channel STANDARD	Name	Function	DMX From	DMX To	Default
18	Prism 1 Index/ Rotation	Prism Indexing			0
		Prism Indexing	0	255	
		Prism Rotation			
		Prism No Rotation	0	0	0
		Prism forward rotation fast to slow	1	127	
		Prism No Rotation	128	128	
		Prism backwards rotation slow to fast	129	255	
19	Prism 2 Linear	Open	0	29	0
		Prism Indexing (set next ch)	30	59	
		Prism Rotation (set next ch)	60	89	
		Reserved	90	255	
20	Prism 2 Index/ Rotation	Prism Indexing			0
		Prism Indexing	0	255	
		Prism Rotation			
		Prism No Rotation	0	0	
		Prism forward rotation fast to slow	1	127	
		Prism No Rotation	128	128	
		Prism backwards rotation slow to fast	129	255	
21	Light Frost	Linear insertion 0 – 100%	0	255	0
22	Heavy Frost	Linear insertion 0 – 100%	0	255	0
23	Iris	Open	0	0	0
		Max to min diameter	1	127	
		Closed	128	129	
		Pulse close slow to fast	130	154	
		Pulse open slow to fast	155	179	
		Random pulse closing slow to fast	180	204	
		Random pulse opening slow to fast	205	229	
		Reserved	230	255	
24	Iris Fine	Iris fine movement	0	255	0
25	Zoom	Zoom from min to max beam angle	0	255	128
26	Zoom Fine	Fine zooming	0	255	0
27	Focus	Focus adjustment	0	255	128
28	Focus Fine	Fine focusing	0	255	0
29	Animation Insertion	Linear insertion from 0% to 100%	0	255	0
30	Animation Rotation	Indexing	0	127	0
		Forward rotation - Fast to slow	128	190	
		Stop	191	192	
		Backwards rotation - Slow to fast	193	255	

Channel STANDARD	Name	Function	DMX		Default
			From	To	
31	Blade 1 position	Movement from outward to inward	0	255	0
32	Blade 1 swivelling	Swivelling from -30° towards 0°	0	127	128
		0 degrees	128	128	
		Swivelling from 0° towards +30°	129	255	
33	Blade 2 position	Movement from outward to inward	0	255	0
34	Blade 2 swivelling	Swivelling from -30° towards 0°	0	127	128
		0 degrees	128	128	
		Swivelling from 0° towards +30°	129	255	
35	Blade 3 position	Movement from outward to inward	0	255	0
36	Blade 3 swivelling	Swivelling from -30° towards 0°	0	127	128
		0 degrees	128	128	
		Swivelling from 0° towards +30°	129	255	
37	Blade 4 position	Movement from outward to inward	0	255	0
38	Blade 4 swivelling	Swivelling from -30° towards 0°	0	127	128
		0 degrees	128	128	
		Swivelling from 0° towards +30°	129	255	
39	Frame rotation	-45 degrees to 0 degrees	0	126	128
		0 degrees	127	128	
		0 degrees to +45 degrees	129	255	
40	Frame macros	No Function	0	3	0
		Macro 1 - Iris Breathe	4	10	
		Macro 2 - Iris Breathe Deep	11	17	
		Macro 3 - Vertical Scissor	18	24	
		Macro 4 - Horizontal Scissor	25	31	
		Macro 5 - Vertical Scissor Line	32	38	
		Macro 6 - Horizontal Scissor Line	39	45	
		Macro 7 - Rotating Wave CW	46	52	
		Macro 8 - Rotating Wave CCW	53	59	
		Macro 9 - Rotating Wave CW Tight	60	66	
		Macro 10 - Rotating Wave CCW Tight	67	73	
		Macro 11 - See-Saw	74	80	
		Macro 12 - Letterbox Pulse	81	87	
		Macro 13 - Pillarbox Pulse	88	94	
		Macro 14 - Slit Scan V	95	101	
		Macro 15 - Slit Scan H	102	108	
		Macro 16 - Guillotine	109	115	
		Macro 17 - Crossfire	116	122	
		Macro 18 - Diamond Breathe	123	129	
		Macro 19 - Smooth Chase	130	136	
		Macro 20 - Corner Snap	137	143	

Channel STANDARD	Name	Function	DMX		Default
			From	To	
40		Macro 21 - Flag Wave	144	150	0
		Macro 22 - Heartbeat	151	157	
		Macro 23 - Razor Sweep	158	164	
		Macro 24 - Wipe Blade 1 Fade-Snap	165	171	
		Macro 25 - Wipe Blade 2 Fade-Snap	172	178	
		Macro 26 - Wipe Blade 3 Fade-Snap	179	185	
		Macro 27 - Wipe Blade 4 Fade-Snap	186	192	
		Macro 28 - Wipe Blade 1 Snap-Fade	193	199	
		Macro 29 - Wipe Blade 2 Snap-Fade	200	206	
		Macro 30 - Wipe Blade 3 Snap-Fade	207	213	
		Macro 31 - Wipe Blade 4 Snap-Fade	214	220	
		Macro 32 - Pendulum Slit V	221	227	
		Macro 33 - Converge Snap	228	234	
		Macro 34 - Arrow Sweep Left	235	241	
		Macro 35 - Arrow Sweep Right	242	248	
		Macro 36 - Arrow Sweep Up	249	255	
41	Frame macros speed	Lineary from 0 to 100%	0	255	0
42	Focus Tracking	OFF	0	49	
		ON - Priority GOBO WHL 1	50	59	
		ON - Priority GOBO WHL 2	60	69	
		ON - Priority BLADES	70	79	
		ON - Priority IRIS	80	89	
		ON - Priority ANIMATION	90	99	
		ON - Priority OPEN	100	109	
		Reserved	110	255	
43	Control	No Function/Safe	0	1	0
		Pan Reverse On	2	3	
		Pan Reverse Off	4	5	
		Tilt Reverse On	6	7	
		Tilt Reverse Off	8	9	
		Pan/Tilt Mode Fast	10	11	
		Pan/Tilt Mode Medium	12	13	
		Pan/Tilt Mode Slow	14	15	
		Reserved	16	43	
		Display On	44	45	
		Display 15s	46	47	
		Flip Display On	48	49	
		Flip Display Off	50	51	
		Flip Display Auto	52	53	

Channel STANDARD	Name	Function	DMX		Default
			From	To	
43	Control	Key Lock On	54	55	0
		Key Lock Off	56	57	
		Fan Mode Auto	58	59	
		Fan Mode Silent	60	61	
		Fan Mode High	62	63	
		No Signal Hold	64	65	
		No Signal Blackout	66	67	
		Status Led On	68	69	
		Status Led Off	70	71	
		Dimmer Curve Linear	72	73	
		Dimmer Curve S-Curve	74	75	
		Dimmer Curve Square Law	76	77	
		Dimmer Curve Inverse Square Law	78	79	
		Dimmer Speed Auto	80	81	
		Dimmer Speed Fast	82	83	
		Dimmer Speed Medium	84	85	
		Dimmer Speed Slow	86	87	
		Led Frequency 1000hz	88	91	
		Led Frequency 2000hz	92	93	
		Led Frequency 4000hz	94	95	
		Led Frequency 6000hz	96	97	
		Led Frequency 25khz	98	99	
		Led Frequency 50khz	100	101	
		Invert Zoom Off	102	103	
		Invert Zoom On	104	105	
		Invert Blades On	106	107	
		Invert Blades Off	108	109	
		Reserved	110	199	
		Reset All	200	201	
		Reset Pan & Tilt	202	203	
		Reset Zoom/Focus	204	205	
		Reset Colors	206	207	
		Reset Gobos/Animation	208	209	
		Reset Effects	210	211	
		Reset All Blades	212	213	
		Reserved	214	251	
		Factory Default Of Control Functions	252	253	
		Reserved	254	255	

14 - FIXED GOBOS WHEEL

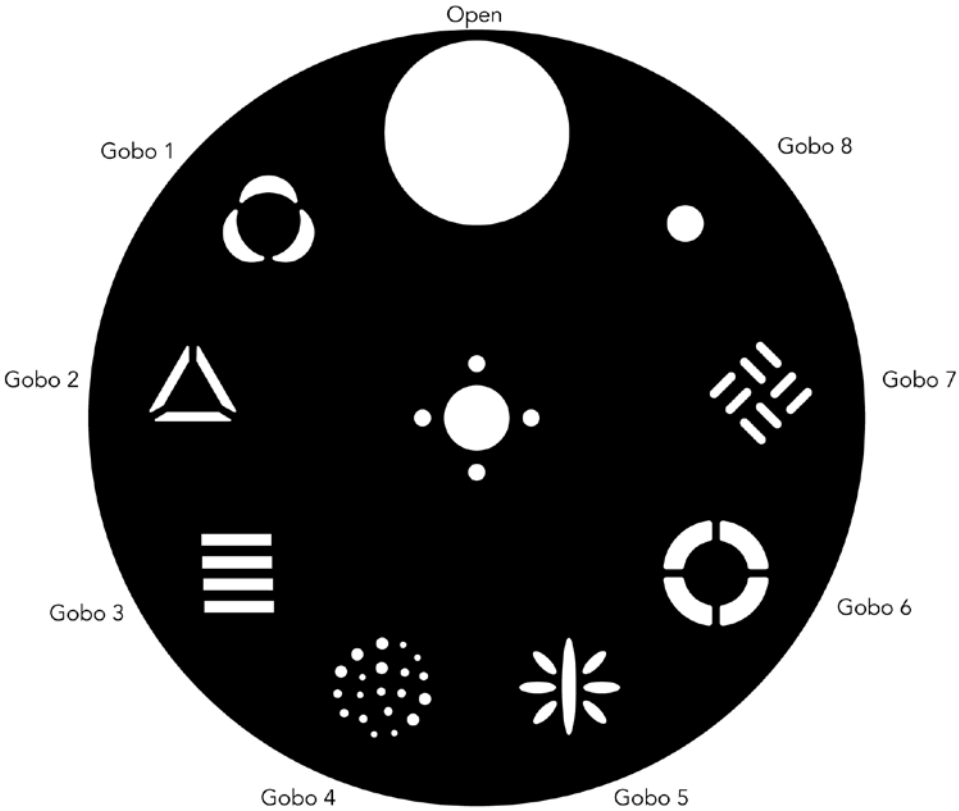

Fig. 13

15 - ROTATING GOBOS WHEEL

Gobo dimensions:

- Ø external (OD)= 25,0 mm
- Ø of image (ID)= 20,0 mm
- Thinckness= up to 3 mm

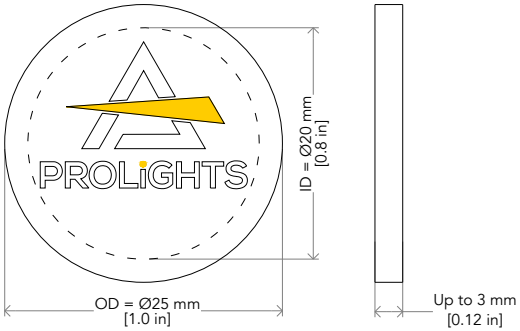

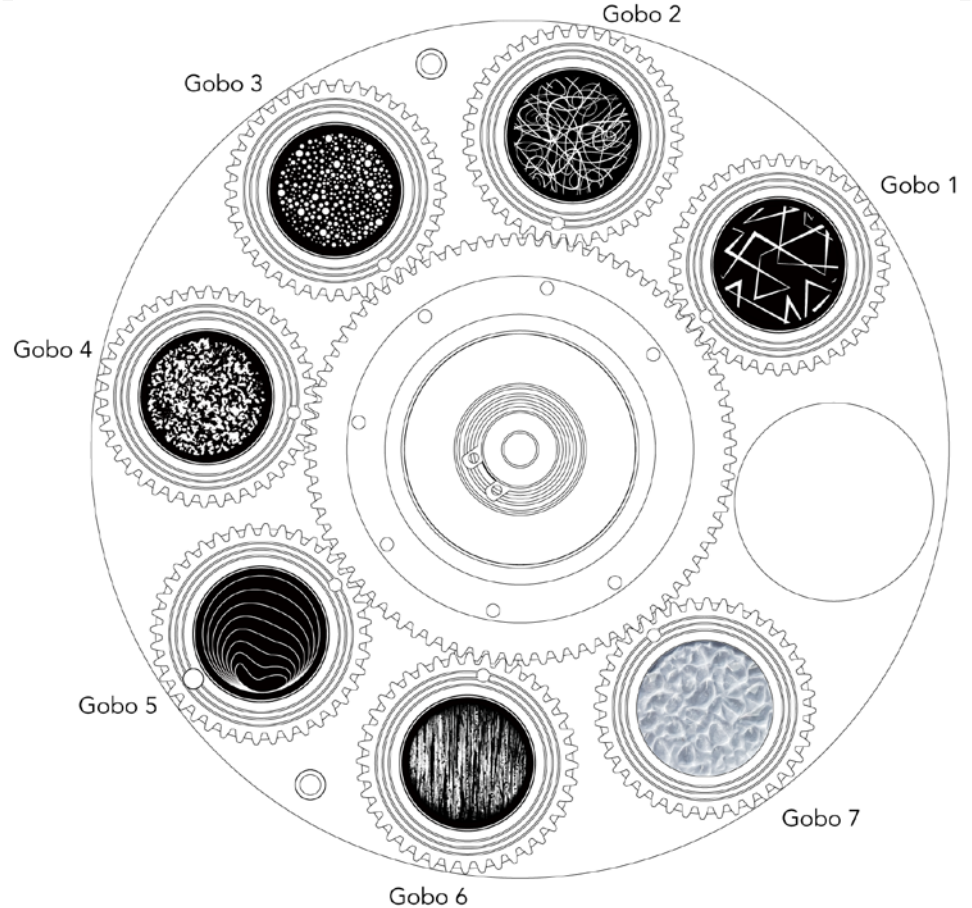

ATTENTION! Load with mirror surface toward the light source.

Fig. 14

16 - COLOR WHEEL

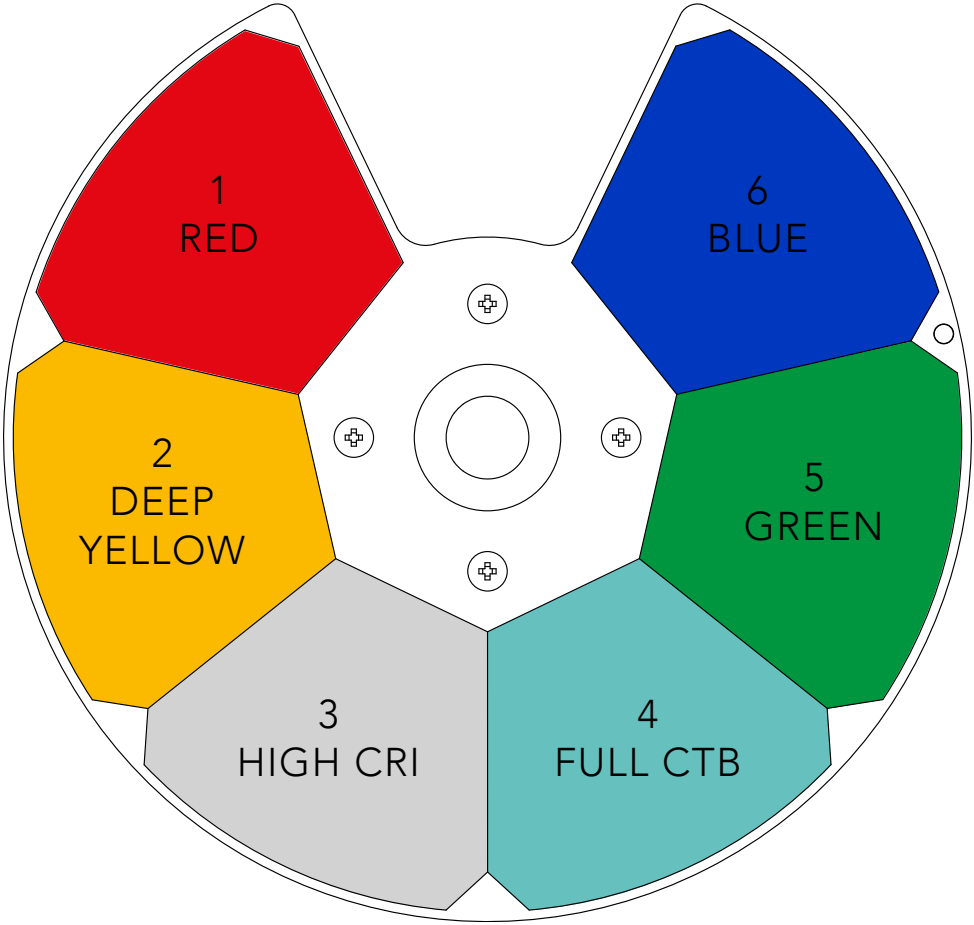

Fig. 15

17 - ANIMATION WHEEL

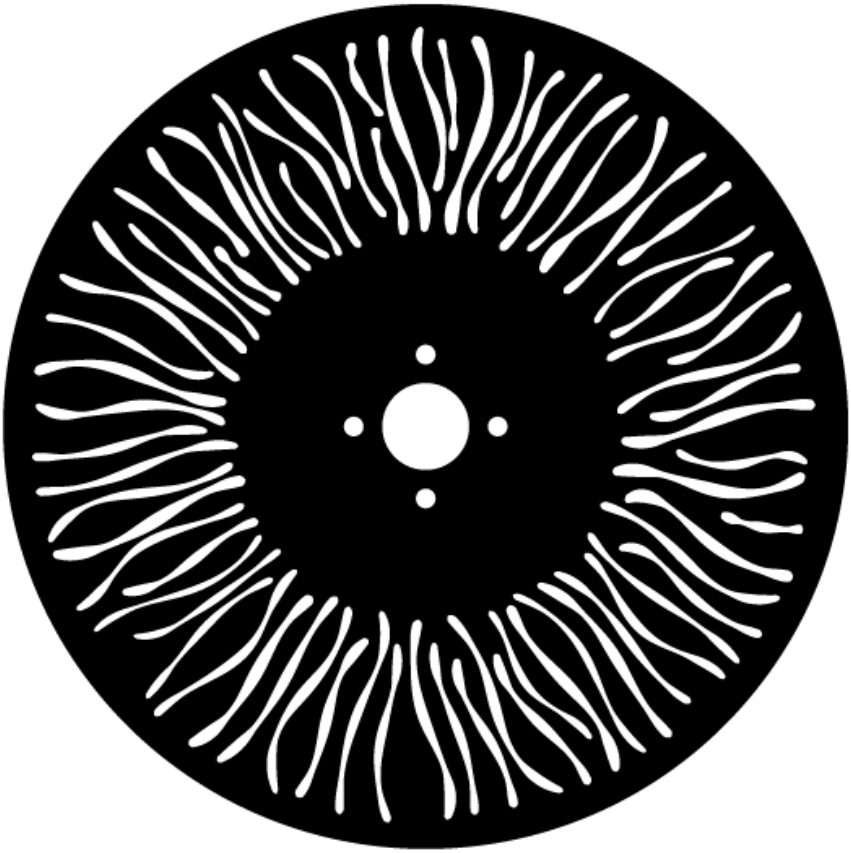

Fig. 16

18 - ERROR MESSAGES

The error is shown on the unit display. In the table below, the "ERROR SHOWED ON SCREEN" column lists the possible errors, accompanied by a possible cause ("POSSIBLE" CAUSES "column).
The color of the error messages (listed in the "COLOR MESSAGES" column) is different for each board it refers to ("PCB" column).
On page 37 you can see the location of the various pcb boards with their respective error colors.

ERROR SHOWED ON SCREEN	POSSIBLE CAUSES	POSSIBLE PCB WITH ANOMALY
BUS 1U DISPLAY TX FAIL	Total can-bus isolation of the display board from all the others	1U
1U FAN1 BASE	Speed < 1000 rpm	1U
1U FAN2 BASE	Speed < 1000 rpm	1U
BUS 2U PAN TILT	2u card not responding	2U
2U PAN SENSOR	Pan sensor/motor failure	2U
	Pan driver failure	
2U PAN BLOCKED	Pan lock inserted	2U
2U TILT SENSOR	Tilt sensor/motor failure	2U
	Tilt driver failure	
2U TILT BLOCKED	Tilt lock inserted	2U
2U FAN ARM	Speed < 1000 rpm	2U
BUS 3U FAN+LED	3u card not responding	3U
3U FAN1 LED	Speed < 1000 rpm	3U
3U FAN2 LED	Speed < 1000 rpm	3U
BUS 4U GOBO+COLOR	4u card not responding	4U
4U DIP-SWITCH	Incorrect dip-switch setting	4U
4U COLOR 1	Color wheel 1 (cyan) sensor/motor/driver failure	4U
4U COLOR 2	Color wheel 2 (magenta) sensor/motor/driver failure	4U
4U COLOR 3	Color wheel 3 (yellow) sensor/motor/driver failure	4U
4U COLOR 4	Color wheel 4 (cto) sensor/motor/driver failure	4U
4U GOBO WHEEL	Gobo wheel sensor/motor/driver failure	4U
4U GOBO INDEX	Rotating gobo index sensor/motor/driver fault	4U
4U ANIMATION	Animation sensor/motor/driver failure	4U
4U FAN1 EFFECTS	Speed < 1000 rpm	4U
4U COLOR WHEEL	Color wheel sensor/motor/driver failure	4U
4U FIX. GOBO	Fixed gobo wheel sensor/motor/driver fault	4U

ERROR SHOWED ON SCREEN	POSSIBLE CAUSES	POSSIBLE PCB WITH ANOMALY
5U DIP-SWITCH	Incorrect dip-switch setting	5U
5U FRAME ROTATION	Sensor/motor/driver frame rotation failure	5U
5U FAN PROFILE	Speed < 1000 rpm	5U
BUS 5U PROFILER	5u card not responding	5U
BUS 6U FOCUS+ZOOM	6u card not responding	6U
6U DIP-SWITCH	Incorrect dip-switch setting	6U
6U ZOOM	Zoom sensor/motor/driver failure	6U
6U FOCUS	Focus sensor/motor/driver failure	6U
6U FROST LIGHT	Frost light sensor/motor/driver failure	6U
6U FROST HEAVY	Frost heavy sensor/motor/driver failure	6U
6U PRISM 4S	4-Sided prism paddle sensor/motor/driver failure	6U
6U PRISM 6S	6-Sided prism paddle sensor/motor/driver failure	6U
6U PRISM 4S INDEX	4-Sided prism rotation sensor/motor/driver failure	6U
6U PRISM 6S INDEX	6-Sided prism rotation sensor/motor/driver failure	6U
6U FAN1 DEFOG	Speed < 1000 rpm	6U
DATAFLASH GLOBAL	Dataflash initialization	-
DATAFLASH JEDEC	Unexpected dataflash model	-
DATAFLASH WRITE	Dataflash writing	-
NTC LED MODULE	Ntc led module fault	-
NTC LED DRIVER	Ntc fault on led driver board	-
FIRMWARE MISMATCH	At least one card has a different fw than the display card	-
MAINTENACE EXPIRED	Scheduled maintenance time expired	-
WIRELESS MODULE	Wireless module missing	-

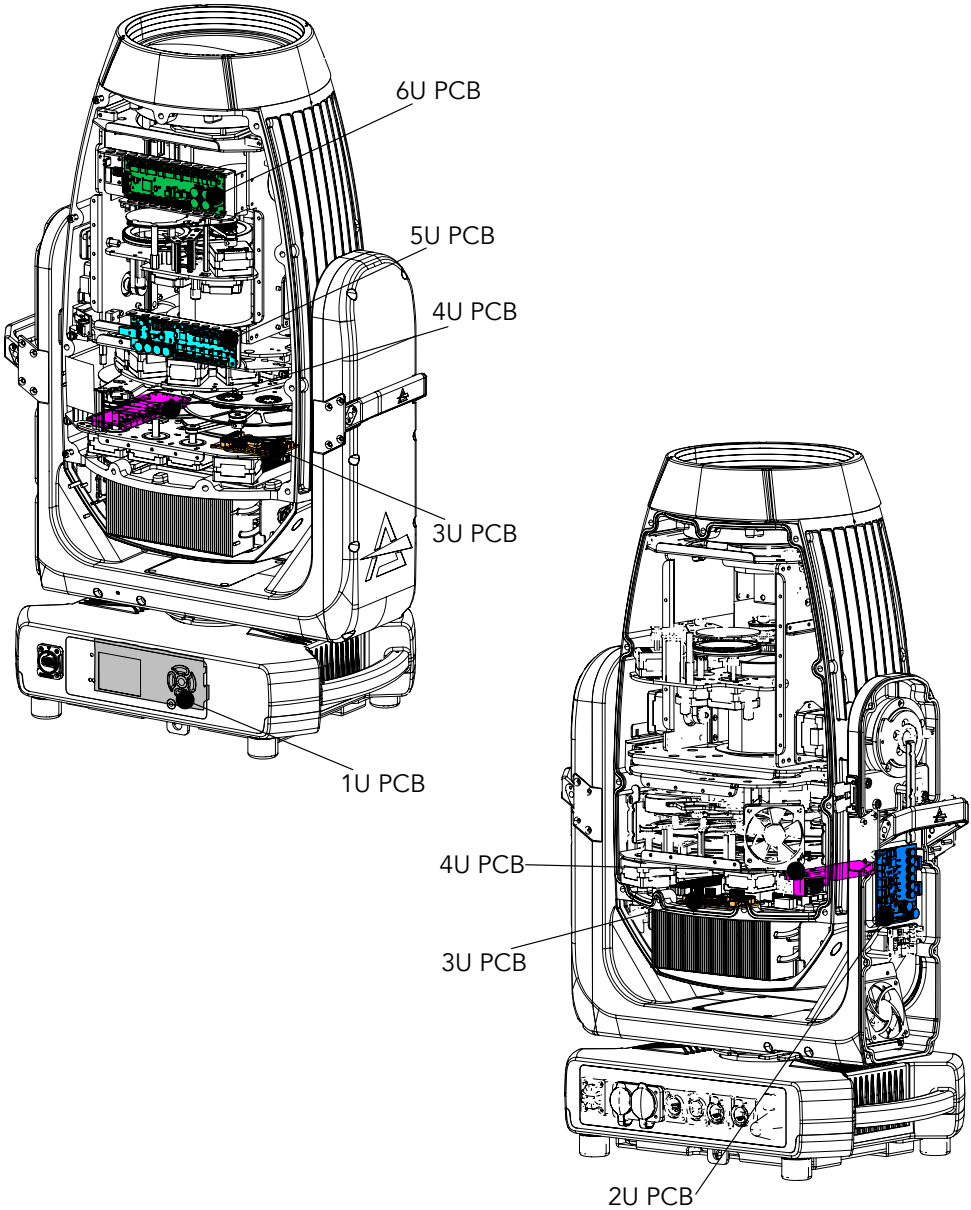

Fig. 17

19 - PERIODICAL CLEANING

WARNING! Turn OFF power and allow approximately 20 minutes for the fixture to cool down.

1

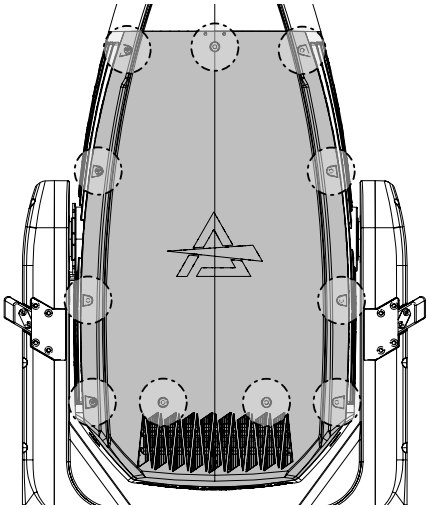

Before removing rear cover, place the head in a horizontal position and engage both the PAN and TILT locks for added stability. See the "PAN AND TILT LOCK" paragraph (pag. 6). Loosen and remove the marked screws and opening the head covers (1) from both sides.

3

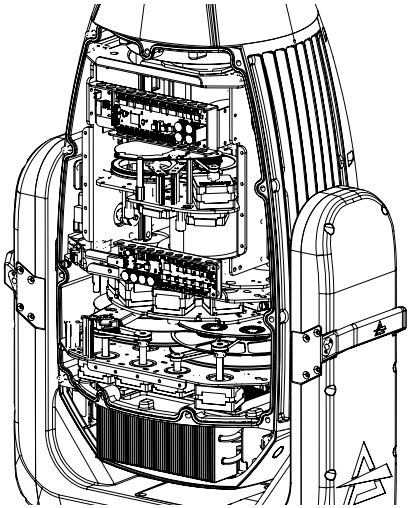

Use a soft cloth dampened with any detergent liquid for cleaning glass to remove the dirt from the reflectors, from the lenses and filters.

2

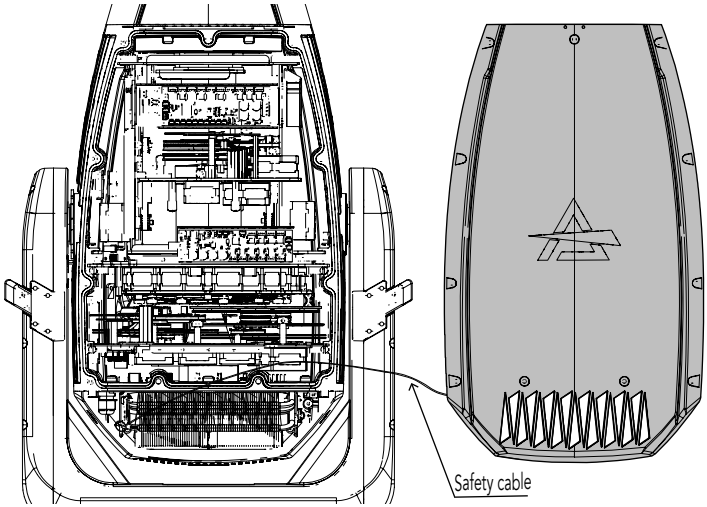

Unclip the safety cable on both sides (2).

Fig. 18

20 - GOBOS REPLACEMENT

1

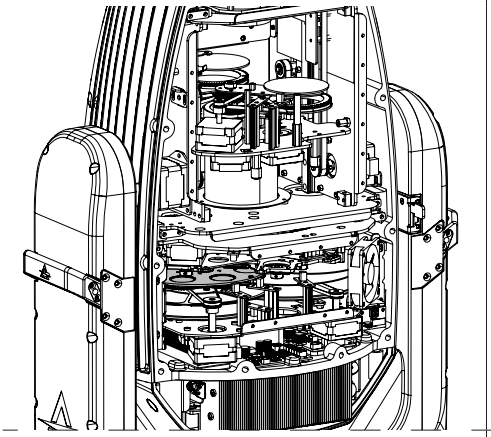

2

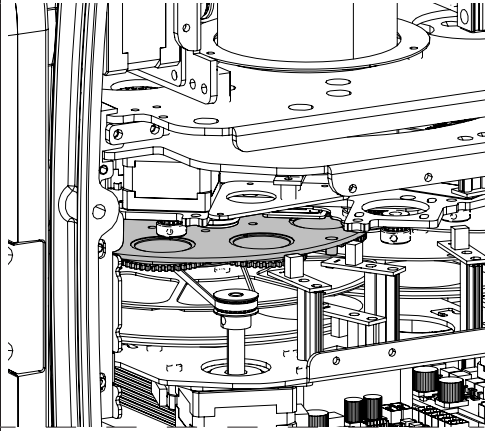

3

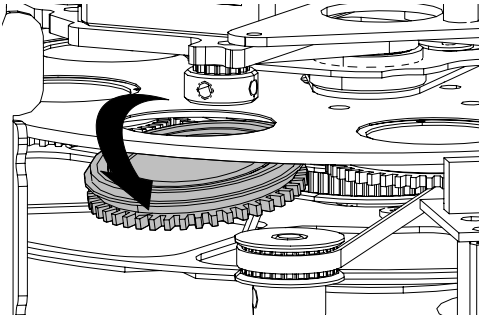

4

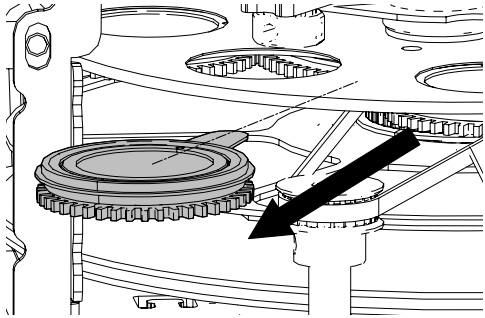

Open the head covers (see the "PERIODICAL CLEANING" paragraph, point 1).
Gently remove the gobo holder from the gobo wheel (3, 4).

5

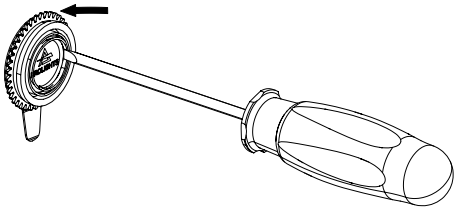

6

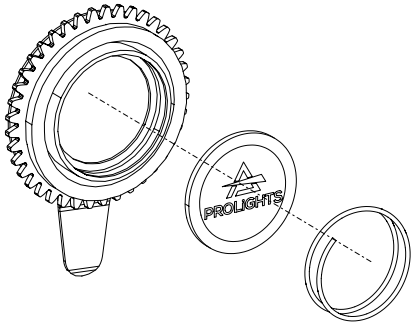

Remove the spring and the gobo (5, 6).
NOTE: *the mirrored part of the gobo must be placed in the direction of the LED Source*

Fig. 19

21 - MODULE REMOVAL (ANIMATION, COLOR, GOBOS WHEEL)

1.1 PROFILE MODULE

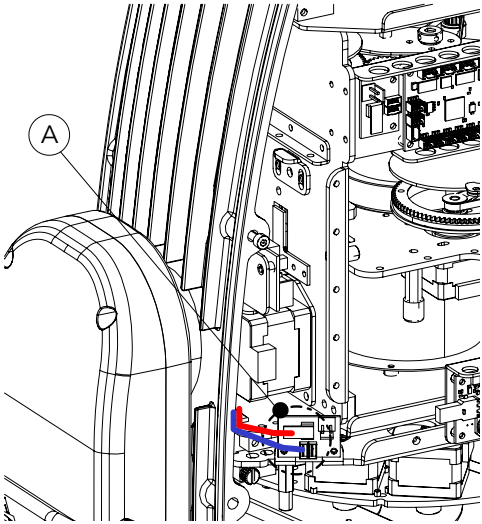

1.2

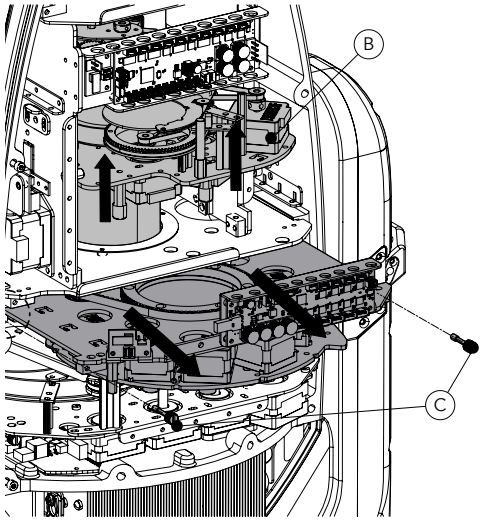

To remove the Profile module, open the head covers (see section "PERIODIC CLEANING") and proceed as follows:

- Disconnect the two connectors, power and serial bus plugs (marked A in drawing 1.1);
- Raise the zoom and focus plates (marked B in drawing 1.2);
- Unscrew the two screws marked in the front view (marked C in drawing 1.2);
- Pull out the plate with Profile module (drawing 1.2);

2.1 GOBOS + ANIMATION + CMY MODULE

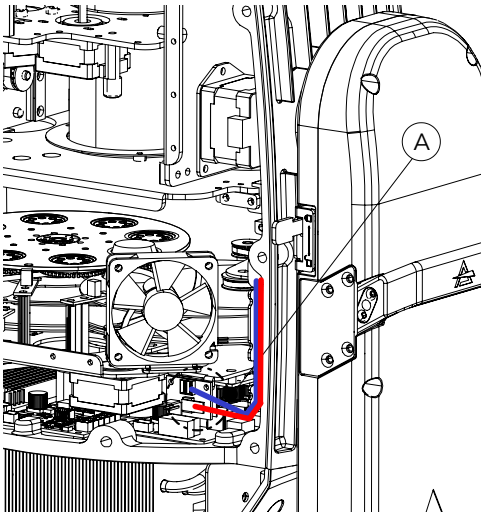

2.2

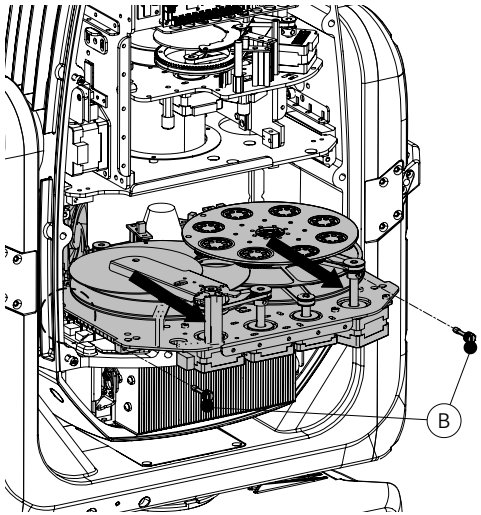

To remove the Gobos + Animation wheel module:

- Disconnect the two connectors, power and serial bus plugs (marked A in drawing 2.1);
- Unscrew the two screws marked in the front view (marked B in drawing 2.2);
- Remove the plate with gobo wheels pulling it out (drawing 2.2).

Fig. 20

22 - USB UPDATE MODE

NOTE: It is necessary to prepare a FAT32-formatted flash drive for the update and copy the prl files onto it. It is advisable to use a flash drive that is empty and free of other files to facilitate the update.

To update the device, proceed as follows:

1	2
SELECT FILE TO UPLOAD Path:/ CODEPROD_Vx.x.xx.xxxx.prl	CODEPROD_Vx.x.xx.xxxx.prl CONFIRM UPLOAD? YES NO

- With the machine turned on, insert the USB drive;
- The update firmware menu will appear, so use the UP and DOWN buttons to select the file to be updated and press ENTER (figure 1).
- To confirm the update, move with the LEFT and RIGHT buttons and select YES by pressing ENTER (Figure 2).

23 - MAINTENANCE

MAINTENANCE AND CLEANING THE PRODUCT

WARNING: Disconnect from the mains before starting any maintenance work

It is recommended to clean the front at regular intervals, from impurities caused by dust, smoke, or other particles to ensure that the light is radiated at maximum brightness.

- For cleaning, disconnect the main plug from the socket. Use a soft, clean cloth moistened with a mild detergent. Then carefully wipe the part dry. For cleaning other housing parts use only a soft, clean cloth. Never use a liquid, it might penetrate the unit and cause damage to it.
- The user must clean the product periodically to maintain optimum performance and cooling. The user may also upload firmware (product software) to the fixture via the DMX signal input port or USB port using firmware and instructions from PROLIGHTS.
- The frequency of such maintenance operations is to be performed according to various factors, such as the amount of the use and the condition of the installation environment (air humidity, presence of dust, salinity, etc.). It is recommended that the product is subject to annual service by a qualified technician for special maintenance involving at least the following procedures:
- General cleaning of internal parts.
- For all the parts subject to friction, using lubricants specifically supplied by PROLIGHTS.
- General visual check of the internal components, cabling, mechanical parts, etc.
- Electrical, photometric and functional checks; eventual repairs.
- Cleaning the lenses. Only use neutral soap and water to clean the lenses, then dry it carefully with a soft, non-abrasive cloth.

WARNING: the use of alcohol or any other detergent could damage the lenses.

- **Only for IP65/IP66 projectors**: It is recommended to verify IP grade using IPTESTBOX every time the bodies are removed for maintenance, this tool helps to double check the correct assembling of the covers with a check of the IP grade of the fixture.
- All other service operations on the product must be carried out by PROLIGHTS, its approved service agents or trained and qualified personnel.
- It is PROLIGHTS policy to apply the strictest possible calibration procedures and use the best quality materials available to ensure optimum performance and the longest possible component lifetimes. However, optical components are subject to wear and tear over the life of the product, resulting in gradual changes in colours over many thousands of hours of use. The extent of wear and tear depends heavily on operating conditions and environment, so it is impossible to specify precisely whether and to what extent performance will be affected. However, you may eventually need to replace optical components if their characteristics are affected by wear and tear after an extended period of use and if you require fixtures to perform within very precise optical and colour parameters.
- Do not apply filters, lenses or other materials on lenses or other optical components. Use only accessories approved by PROLIGHTS.

VISUAL CHECK OF PRODUCT HOUSING

- The parts of the product cover/housing should be checked for eventual damages and breaking start at least every two months. In addition, especially the parts of the front lens holder have to be checked mechanically (by means of movement by the part) if it is firmly fastened to the fixture. If hint of a crack is found on some plastic part, do not use the product until the damaged part will be replaced.
- Cracks or another damages of the cover/housing parts can be caused by the product transportation or manipulation and also ageing process may influence materials.
- This checking is necessary for both fixed installations and preparing product for renting. Any free moving parts inside of the product, cracked cover/housing or any part of front lens not sitting properly in place need to be immediately replaced.

RESETTING THE MAINTENANCE TIME MESSAGE

When the machine shows the message "MAINTENANCE TIME" it means that the fixture needs an overall check. once you have checked and cleaned the whole machine to reset the message follow the steps below:

- enter the menu, go to INFORMATIONS and press Enter;
- go to FIXTURE TIME and press Enter;
- finally go to MAINTENANCE TIME and press Enter;
- Press enter again and enter the password 050 to reset the message.

Problems	Possible causes	Checks and remedies
Product doesn't power ON	• No power to the product	• Check that power is switched ON and cables are plugged in.
	• Fuse blown or internal fault	• Check if the Fuse is intact and eventually replace it if necessary. • Contact the PROLIGHTS Service or authorized service partner. Do not remove parts and/or covers, or carry out any repairs or service that are not described in this Safety and User Manual unless you have both authorization from PROLIGHTS and the service documentation.
Product reset correctly but does not respond correctly to the contoller.	• Bad signal connection	• Inspect connections and cables. Fix eventual bad connections. Repair or replace damaged cables.
	• Signal connection not terminated	• Insert DMX termination plug in signal output socket of the last product on the signal line.
	• Incorrect addressing of the product	• Check the product address and control settings
	• One of the product is defective and is corrupting the signal transmission on the signal line	• Unplug the XLR in and out connectors and connect them directly together to bypass one product at a time until normal operation is regained. Once found the error, have that fixture serviced by a qualified technician.
Timeout error after fixture reset.	• One or more hardware components requires mechanical adjustments	• Check product stored error messages for more information. Contact PROLIGHTS Service or an authorized service partner.
Mechanical effect loses position	• Mechanical hardware require cleaning, adjustment or lubrification	• Check product stored error messages for more information. Contact PROLIGHTS Service or an authorized service partner.
Light output turn OFF Intermittently	• Fixture is too hot	• Check product stored error messages; • Allow product to cool; • Clean the product and airflow filters; • Reduce ambient temperature.
	• Hardware failure (temperature sensor, fans, Light source...)	• Check product stored error messages for more information. Contact. PROLIGHTS Service or an authorized service partner.
General low light intensity	• Dirty lens assembly • Dirty or damaged filters	• Clean the fixture regularly; • Install lens assembly properly.

Contact an authorized service center in case of technical problems or not reported in the table can not be resolved by the procedure given in the table.

24 - TEST OF IP65 RATING

It is recommended to verify IP grade using IPTESTBOX every time the bodies are removed for maintenance.

1

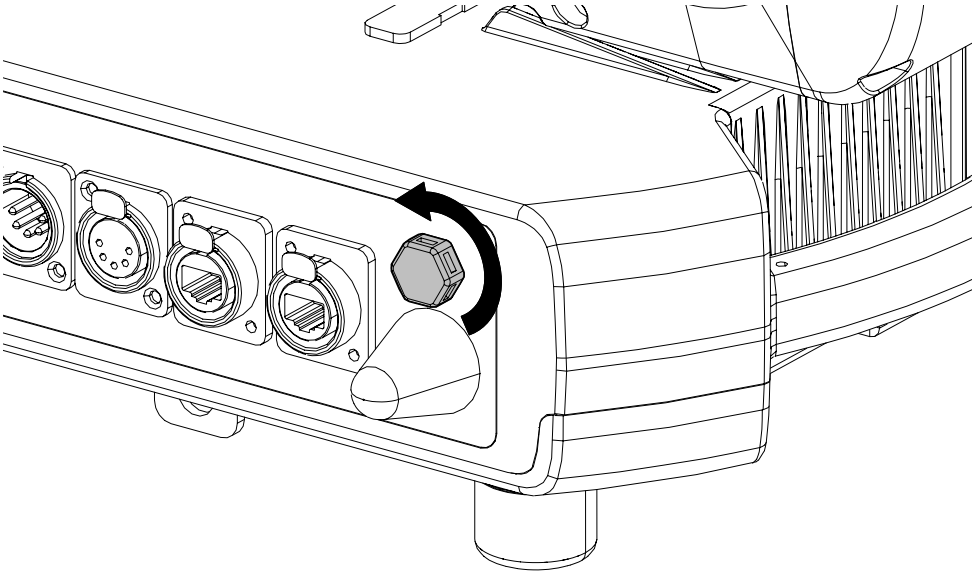

Remove the gore valve from the connections panel.

2

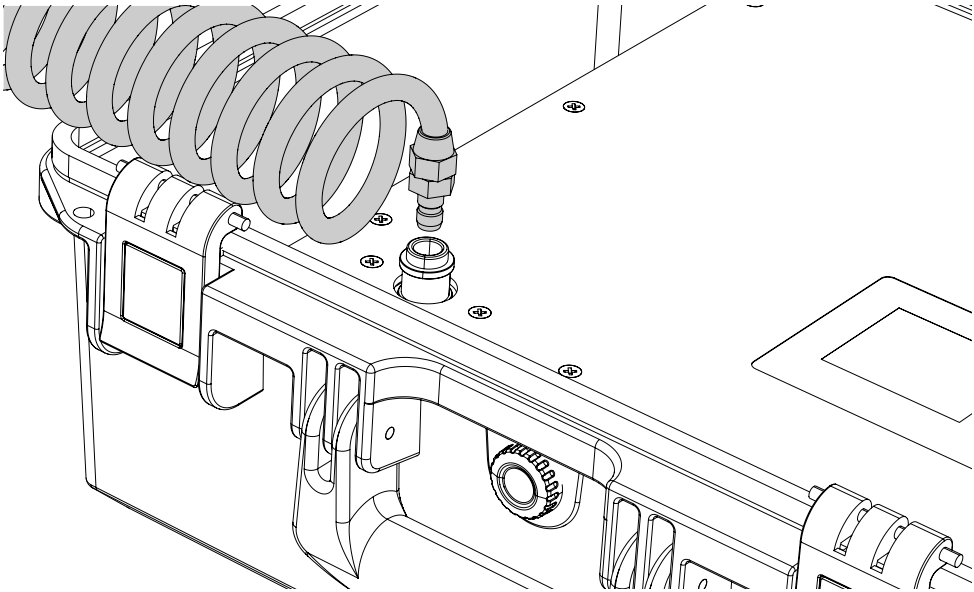

Connect the air hose to the IPTESTBOX by inserting the quick-connect fitting into the coupler.

3

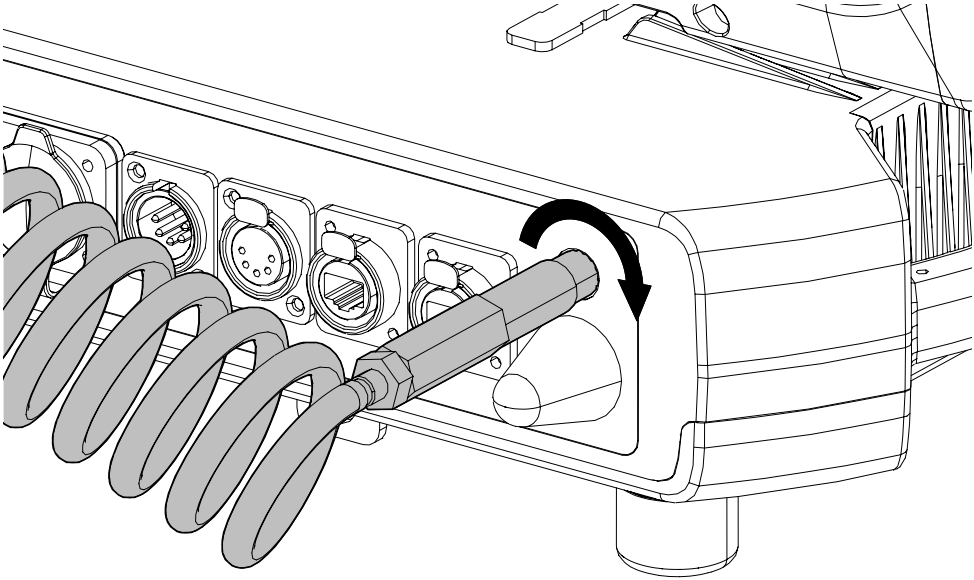

Insert the threaded end into the threaded valve hole socket.

4

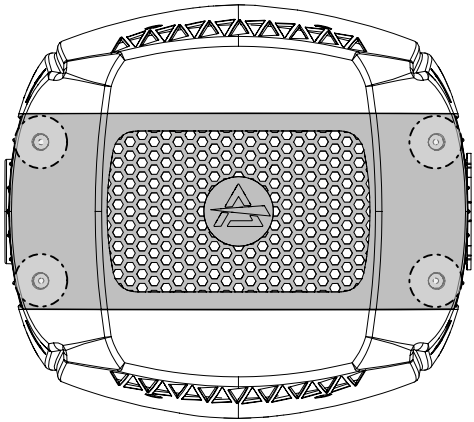

5

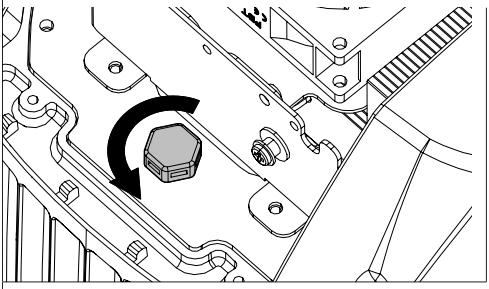

6

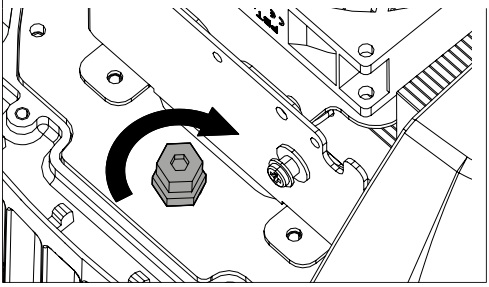

Loosen the four screws (4) and remove the rear cover. Remove the gore valve on the rear connection heatsilk module (5) and insert the hex socket cap head included in the IPTESTBOX box (6).
For the operating procedure using the instrument, refer to the IPTESTBOX user manual.

Fig. 21

Note

Note

PROLIGHTS is a trademark of
MUSIC & LIGHTS S.r.l.
musiclights.it

Via A.Olivetti snc
04026 - Minturno (LT) ITALY
Tel: +39 0771 72190

prolights.it
support@prolights.it